Sears CRAFTSMAN COMMERCIAL owners manual

SPD

MODEL No.
113.29510

CAUTION:
Read Safety Rules and Instructions Carefully

- Assembly
- Operating
- Repair Parts

COPYRIGHTED - NOT INTENDED FOR RE-SALE

Part No. 63313

Printed in U.

CRAFTSMAN

SAFETY RULES FOR POWER TOOLS

1. KNOW YOUR POWER TOOL
Read the owner's manual carefully. Learn its application and limitations as well as the specific potential hazards peculiar to this tool.

2. GROUND ALL TOOLS
If tool is equipped with three-prong plug, it should be plugged into a three-hole receptacle. If adapter is used to accommodate two-prong receptacle, the adapter wire must be attached to a *known ground*. Never remove third prong.

3. KEEP GUARDS IN PLACE
and in working order.

4. REMOVE ADJUSTING KEYS AND WRENCHES
Form habit of checking to see that keys and adjusting wrenches are removed from tool before turning on tool.

5. KEEP WORK AREA CLEAN
Cluttered areas and benches invite accidents.

6. AVOID DANGEROUS ENVIRONMENT
Don't use power tools in damp or wet locations. Keep work area well illuminated.

7. KEEP CHILDREN AWAY
All visitors should be kept a safe distance from work area.

8. MAKE WORKSHOP KID PROOF
— with padlocks, master switches, or by removing starter keys.

9. DON'T FORCE TOOL
It will do the job better and be safer at the rate for which it was designed.

10. USE RIGHT TOOL
Don't force tool or attachment to do a job it was not designed for.

11. WEAR PROPER APPAREL
No loose clothing or jewelry to get caught in moving parts.

12. USE SAFETY GLASSES
Also use face or dust mask if cutting operation is dusty.

13. SECURE WORK
Use clamps or a vise to hold work when practical. It's safer than using your hand, frees both hands to operate tool.

14. DON'T OVERREACH
Keep your proper footing and balance at all times.

15. MAINTAIN TOOLS IN TOP CONDITION
Keep tools sharp and clean for best and safest performance. Follow instructions for lubricating and changing accessories.

16. DISCONNECT TOOLS
before servicing and when changing accessories such as blades, bits, cutters.

17. AVOID ACCIDENTAL STARTING
Make sure switch is "OFF" before plugging in cord.

18. USE RECOMMENDED ACCESSORIES
Consult the owner's manual. Use of improper accessories may be hazardous.

The operation of any power tool can result in foreign objects being thrown into the eyes, which can result in severe eye damage. Always wear safety glasses or eye shields before commencing power tool operation. We recommend **Wide Vision Safety Mask** for use over spectacles, or standard safety glasses . . . available at Sears retail or catalog stores.

SAFETY SEAL pti power tool institute

THIS SAFETY SEAL OF THE POWER TOOL INSTITUTE ASSURES YOU . . .

1. That the manufacturer's power tools, including the particular tool associated with the Seal, are produced in accordance with applicable Standards For Safety of Underwriters' Laboratories and American National Standards (ANSI).
2. That compliance with applicable safety standards is assured by independent inspection and testing conducted by Underwriters' Laboratories (UL).
3. That every motorized tool is inspected under power.
4. That every tool has with it adequate instructions and a list of safety rules for the protection of the user.
5. That the tool manufacturer is a member of the Power Tool Institute and is a sponsor of the Institute's Consumer Safety Education Program.

Copyright 1969 by Power Tool Institute, Inc. All rights reserved.

COPYRIGHTED - NOT INTENDED FOR RE-SALE

CONTENTS

	Page
Unpacking and Pre-Assembly Instructions	3
Assembly and Adjustments	4
Electrical Connections	11
Operating Controls	13
Basic Saw Operations	16
Trouble Shooting	19
Motor Trouble Shooting Chart	24
Repair Parts	26

TOOLS NEEDED

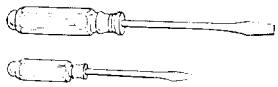

Screwdriver (medium)
Screwdriver (small)

Pliers

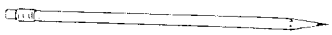

Pencil

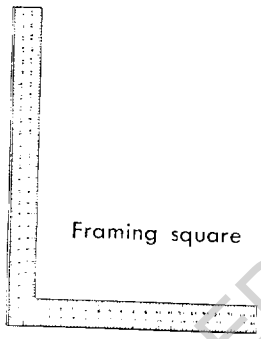

Framing square

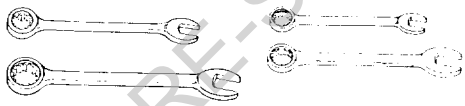

3/8-inch wrench
7/16-inch wrench
1/2-inch wrench
5/8-inch wrench

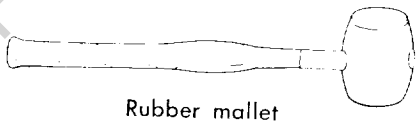

Rubber mallet

UNPACKING AND PREASSEMBLY INSTRUCTIONS

1. Unpacking and Checking Contents

a. Before proceeding with the assembly of your new Craftsman 12-Inch Radial saw, you should read these instructions and follow them carefully.

b. This Saw is shipped complete in one carton. However, in order to prevent damage during shipment and facilitate packaging, certain items are removed at the factory and must be reassembled when received by the purchaser. These "loose" parts are shown in figure 1 and listed in the "Table of Loose Parts" below.

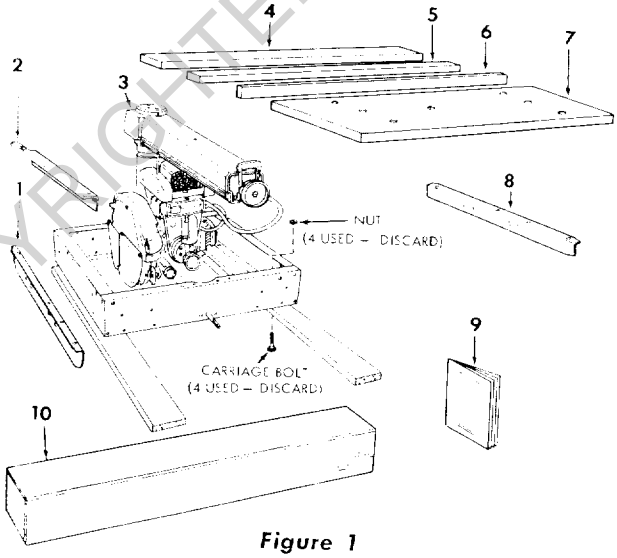

Figure 1

c. Separate all "loose" parts from packaging materials and check each item with figure 1 and "Table of Loose Parts", making sure all items are accounted for before discarding any packing material.

Key No. (Fig. 1)	Table of Loose Parts	Qty.
1	Table support (left-hand)	1
2	Table support No. 2 (center)	1
3	Basic saw assembly	1
4	Rear table	1
5	Table spacer	1
6	Rip fence	1
7	Front table	1
8	Table support (right-hand)	1
9	"Owners Manual"	1
10	Loose Parts Carton (containing the following items):	
	Hex-"L" wrench (1/8")	1
	Hex-"L" wrench (3/16")	1
	Hex-"L" wrench (1/4")	1
	Elevation crank assembly	1
	Knob assembly, pull	1
	Screw, hex.-hd., 3/8-16 x 1"	20
	Lockwasher, medium, 3/8"	20
	Washer, flat (steel), 13/32 x 7/8 x 1/16"	20
	Nut, square, 3/8-16 x 5/8 x 21/64"	20
	Rip-scale indicator	2
	Twin nut (for attaching rip scale indicator)	2
	Machine screw, hex-hd., 5/16-18 x 3/4"	1
	Washer, steel (flat), 11/32 x 7/8 x 1/16"	1
	Lockwasher, medium 5/16"	1
	Nut, hex., 5/16-18 x 1/2 x 17/64"	1
	Machine screw, pan.-hd., 1/4-20 x 1"	7
	Washer, steel (flat), 17/64 x 5/8 x 1/32"	7
	Lockwasher, medium, 1/4"	6
	Nut, hex., 1/4-20 x 7/16 x 3/16"	6
	Table clamp	3
	Shaft wrench	1
	Arbor wrench	1
	Switch key	2
	Leg	4
	Nut, "U" clip	1
	Hook, cord	1

COPYRIGHTED - NOT INTENDED FOR RE-SALE

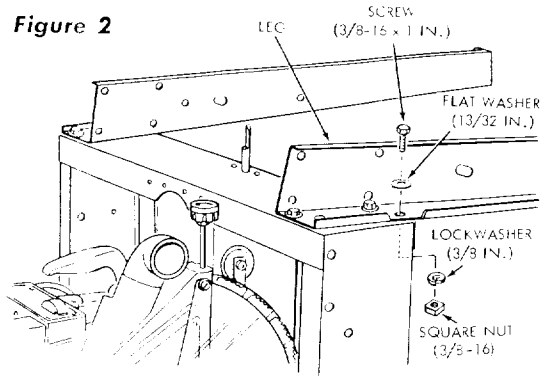

Figure 2

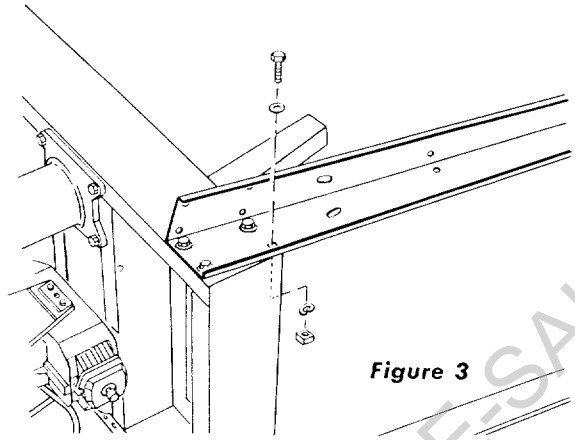

Figure 3

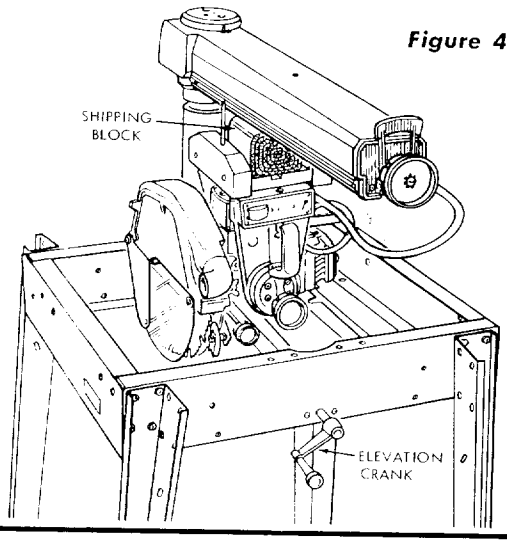

Figure 4

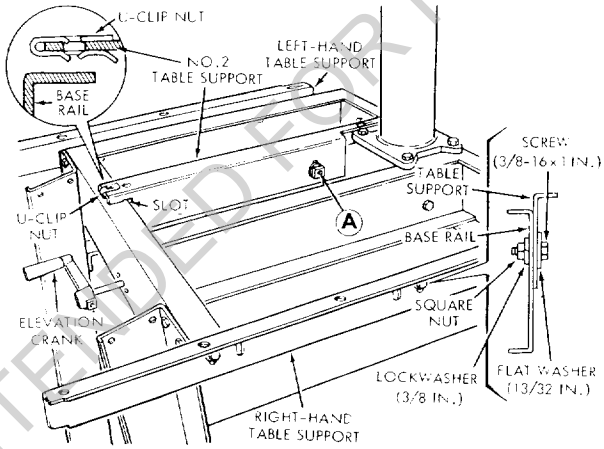

Figure 5

2. Installing Legs

a. Tilt the basic saw assembly (3, figure 1) carefully rearward.

b. Install two legs on front of base (figure 2) with four 3/8-16 x 1-inch, hex-head screws, four 13/32-inch flat washers, four 3/8-inch lockwashers and four 3/8-16 square nuts in each leg. The legs must be oriented as shown in figure 2.

c. Tilt the basic saw assembly to the left and install the right-hand rear leg. (See figure 3.)

d. Tilt the saw to the opposite position and install the left-hand rear leg.

e. Raise the saw to a vertical position — supported on its legs.

3. Installing Motor and Carriage Assembly on Radial Arm

a. Install the elevation crank (figure 4) on end of elevation shaft and tighten the set screw on flat portion of shaft with a 1/8-inch hex-L wrench.

b. Rotate the elevation crank clockwise several turns to free the shipping block (fibre pad), located between the carriage and radial arm. (See figure 4.) Remove and discard the shipping block.

c. Refer to figure 6 and, with a 3/16-inch hex-L wrench, remove the carriage stop screw and lockwasher.

d. Grasp the carriage with both hands (figure 7) and carefully start the carriage bearings onto the tracks on the radial arm. Be sure to hold the assembly parallel to the arm as it is carefully slipped into position until all four bearings are on the tracks in order to prevent excessive strain on the bearings and tracks.

e. Install and tighten the carriage stop screw and lockwasher. (See figure 6.)

f. Move the carriage back and forth along the radial arm. It should roll smoothly throughout the entire travel range.

4. Installing Table Supports

a. Install right- and left-hand table supports (figure 5) with two 3/8-16 x 1-inch, hex-head screws, 13/32 flat washers, 3/8-inch lockwashers and 3/8-16 square nuts in each table support. Refer to inset in figure 5 for correct location of nuts and washers. Tighten these screws just enough to permit the table supports to slip when tapped with a mallet — to facilitate later adjustments. Tap each table support until the screw

COPYRIGHTED - NOT INTENDED FOR RE-SALE

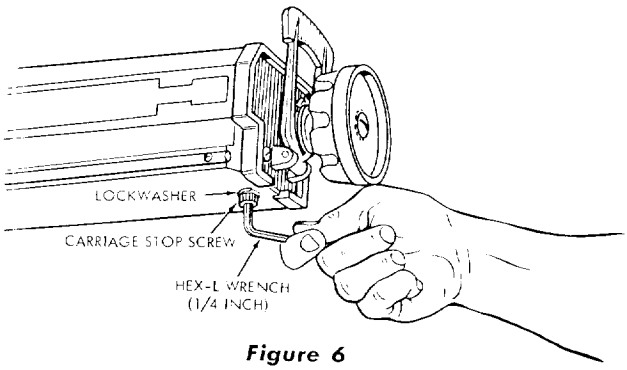

Figure 6

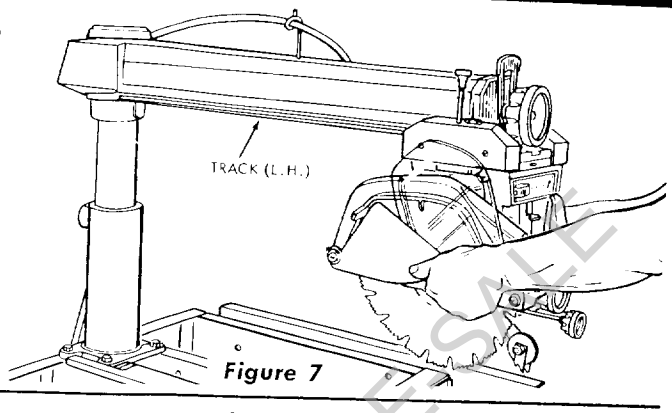

Figure 7

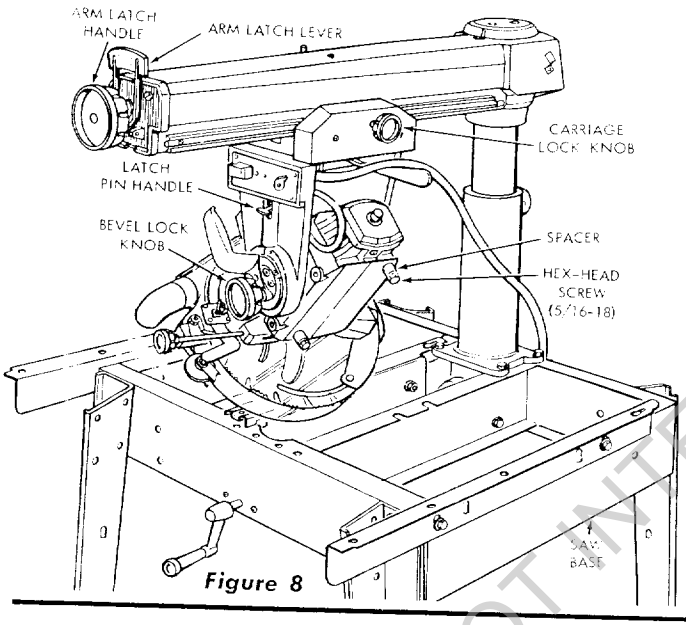

Figure 8

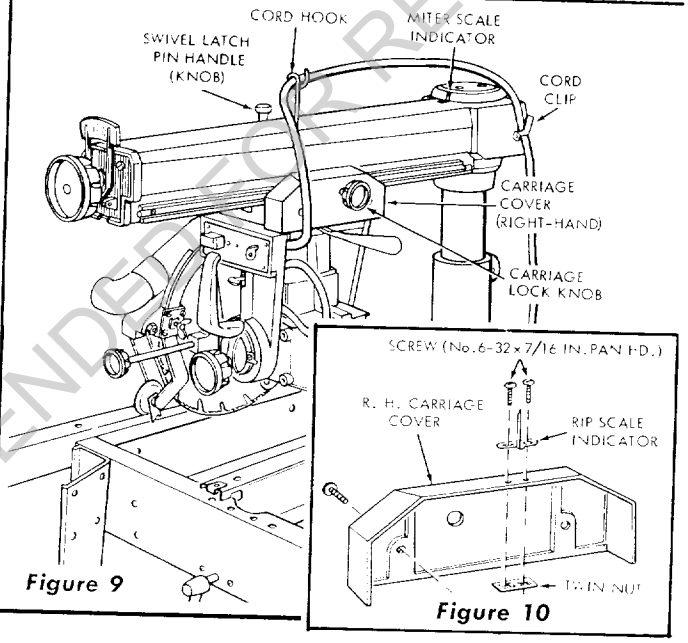

Figure 9

Figure 10

mounting slots are positioned with screws approximately equal distant from ends of slots.

b. Install the No. 2 table support (figure 5) by "hooking" the forward end over the upper flange of front base rail and attaching the rear of support (at point "A", figure 5) with one 5/16-18 x 3/4-inch, hex-head screw, 11/32-inch flat washer, 5/16-inch lockwasher and square nut. The nut should be facing toward the right, as shown. Tighten the screw as described in preceding step a.

c. Slide the U-clip nut on forward end of No. 2 table support, as shown in inset of figure 5. (The formed portion of the U-clip must be underneath the table support.) Align the hole in the U-clip nut with hole in No. 2 table support.

5. Removing Shipping Spacers

a. Tighten the carriage lock knob. (See figure 8.)

b. Loosen the bevel lock knob.

c. Lift the latch pin handle.

d. Tilt the motor to the left, as shown in figure 8. The latch pin will drop into a notch when the motor and carriage assembly are rotated to the 45° position.

e. Remove and discard two 5/16-inch, hex-head screws and shipping spacers. (See figure 8.)

f. Lift the latch pin handle and rotate motor and carriage assembly back to a horizontal position. Tighten the bevel lock knob.

6. Installing Remaining "Loose Parts": (See figure 9)

a. Install swivel latch pin handle (knob).

b. Screw the cord hook into threaded hole and hook the power cord into it.

c. Attach the power cord to radial arm by loosening the cord clip attaching screw, placing cord under the clip and tightening the attaching screw.

d. Remove the right-hand carriage cover and carriage lock knob.

e. Attach one of the two rip-scale indicators to the carriage cover (figure 10) with one twin nut and two No. 6-32 x 7/16-inch, pan-head screws. Tighten the screws lightly as the rip scale indicators will be adjusted later.

f. Re-install the carriage cover and carriage lock knob.

g. Remove the left-hand carriage cover, attach the rip-scale indicator as described in preceding instructions and re-install the cover.

COPYRIGHTED - NOT INTENDED FOR RESALE

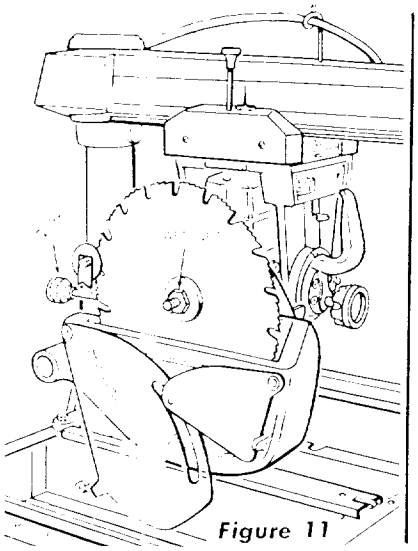

Figure 11

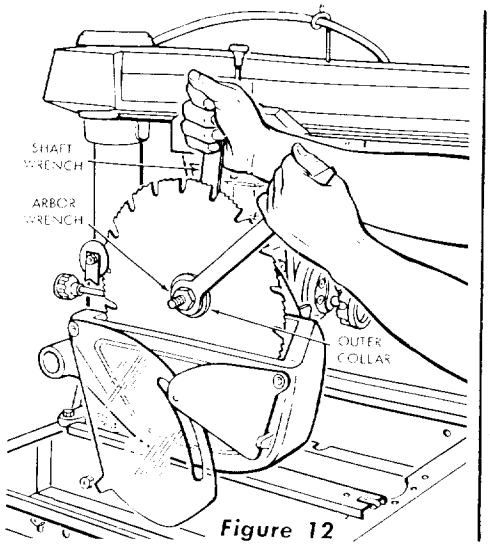

Figure 12

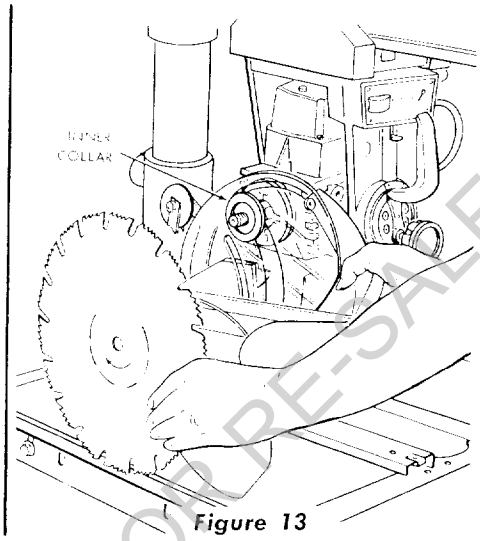

Figure 13

ALIGNMENT INSTRUCTIONS

Alignment instructions that follow are presented in the most logical order to insure accurate performance of your saw.

WARNING: Make sure the power cord is not plugged into an electrical outlet when working on the saw.

1. Removing Guard and Saw Blade

a. Loosen the guard clamp knob several turns and rotate the guard to an upside-down position. (See figure 11.) Loosen the knob still further, until indicator groove or the clamp bar is exposed, to allow the guard to drop down far enough to expose the shaft nut.

b. Place the arbor wrench on the shaft nut and the shaft wrench on the hex portion of motor shaft just inside the saw blade. (See figure 12.)

c. Hold the shaft wrench and rotate the arbor wrench downward to loosen the shaft nut. The motor shaft has left-hand threads. (See figure 12.)

d. Remove the shaft nut and outer collar.

e. Grasp the saw blade, slide it off the shaft and out of the guard. (See figure 13.) Remove the guard and blade out of work area.

2. Adjusting Table Supports Parallel To Radial Arm

a. Loosen the bevel lock knob and lift up on the latch pin handle. (See figure 14.)

b. Swivel the motor counterclockwise until the saw end of shaft is pointing straight down and the latch pin handle "snaps" into a detent. (See figure 15.) Tighten the bevel lock knob. If the motor shaft strikes some part of the saw base raise the radial arm enough to clear it by rotating the elevation crank.

c. Loosen the arm latch knob by rotating it counterclockwise until it stops. (See figure 16.) This will free the radial arm, permitting it to be moved from right to left by hand. Also, make sure the carriage lock knob (figure 16) is loose enough to permit the carriage to move freely back and forth on the arm.

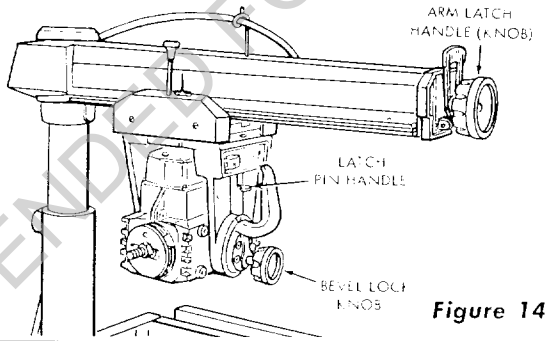

Figure 14

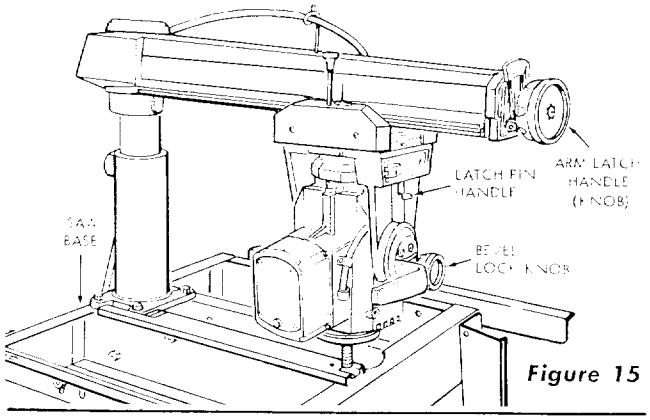

Figure 15

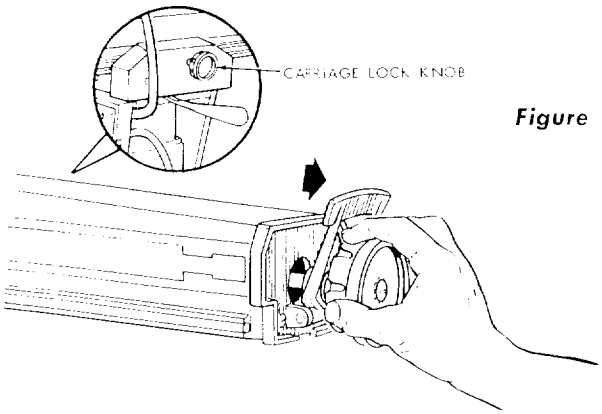

Figure 16

COPYRIGHTED, NOT INTENDED FOR RE-SALE

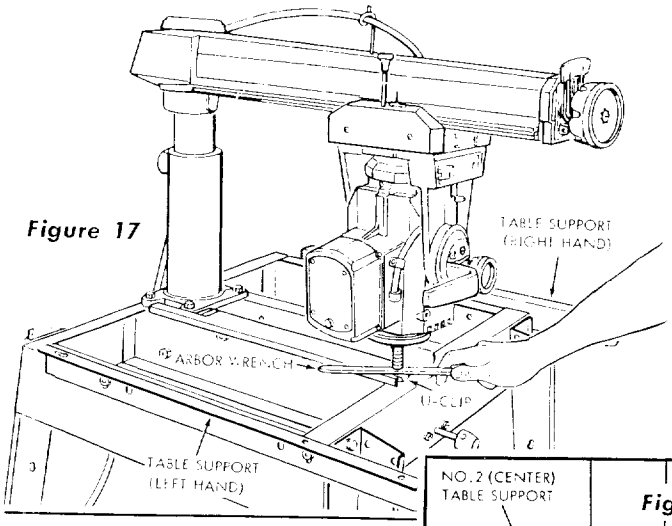

Figure 17

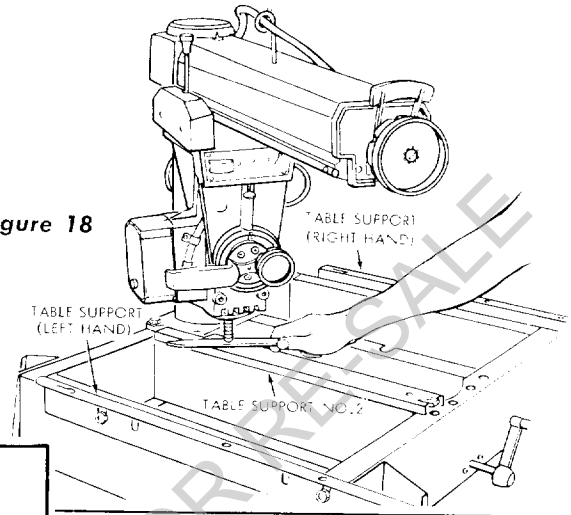

Figure 18

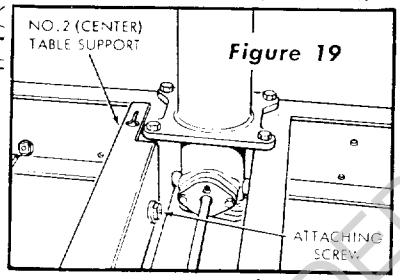

Figure 19

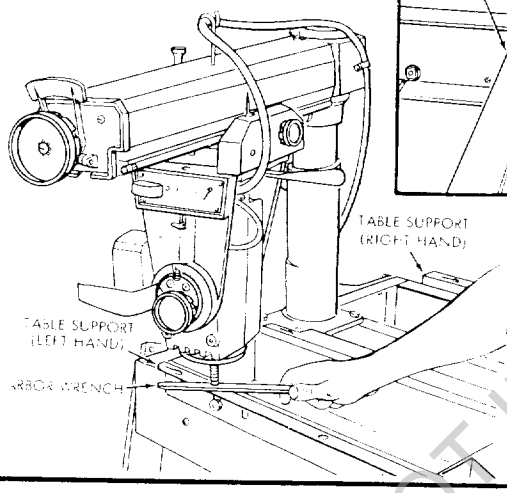

Figure 20

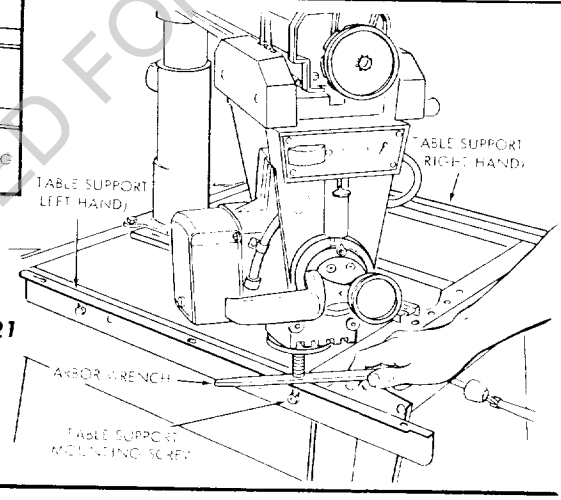

Figure 21

d. The forward end of the No. 2 (center) table support is anchored to the saw base with a slot and, consequently is not adjustable. For this reason, this location is the starting point for adjusting all of the table supports. (See figure 17.)

e. Move the carriage and swing the radial arm until the end of motor shaft is positioned directly over the U-clip, located on the outer end of table support No. 2. Place the arbor wrench on the U-clip, then, with the elevation crank, lower the carriage until the end of the shaft just touches the arbor wrench. (See figure 17.)

f. Carefully adjust the motor up or down with the elevation crank until the arbor wrench (being used as a "Feeler") slides back and forth with only slight resistance. (See figure 17.)

NOTE: Do not change the elevation setting of the motor until all table supports have been adjusted.

g. Remove the arbor wrench and position the motor until end of shaft is directly over the rear position of table support No. 2. (See figure 18.) With the attaching screw hand tight, tap the rear of No. 2 table support upward or downward until the end of motor shaft just touches the arbor wrench, held between the end of motor shaft and top of support as in the preceding step.

h. Recheck the front position (figure 17), since a change at the rear could slightly affect the front setting. Check back and forth until both front and rear positions are exactly the same height. Tighten the attaching screw and nut (figure 19).

i. Move the motor shaft to the rear position of the left-hand table support (over the rear mounting screw) and adjust the left-hand support in the same manner as the No. 2 support. (See figure 20.)

j. Move the motor to the forward end of the left-hand table support, over the front mounting screw (figure 21), and adjust the forward position up or down as required.

k. Recheck both rear and forward positions (figures 20 and 21) until the arbor wrench slides with the same resistance at each position. Several trials may be required to produce an accurate setting.

l. Tighten two left-hand table support mounting screws.

m. Move the radial arm over to the right-hand table support and adjust it in the same manner, as described for the left-hand support.

COPYRIGHTED - NOT INTENDED FOR RE-SALE

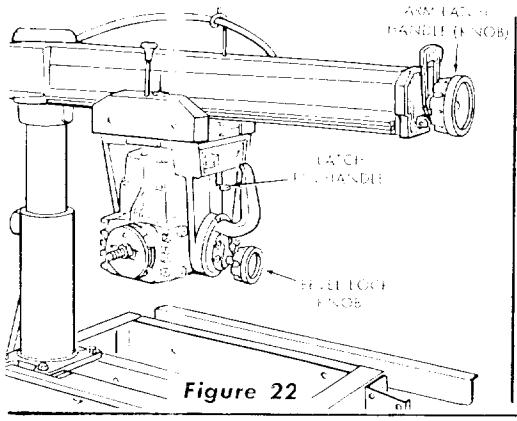

Figure 22

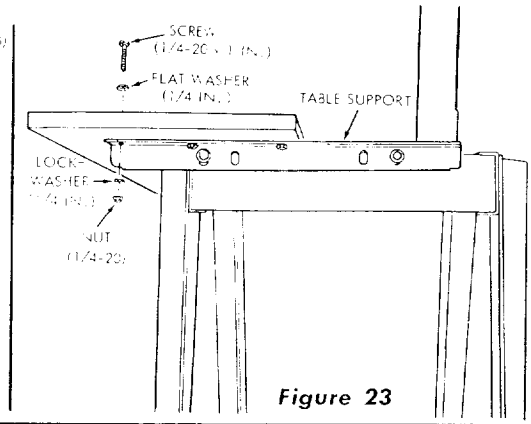

Figure 23

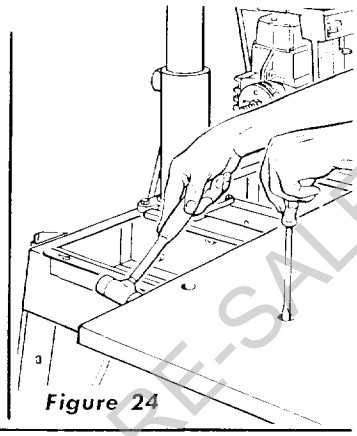
Figure 24

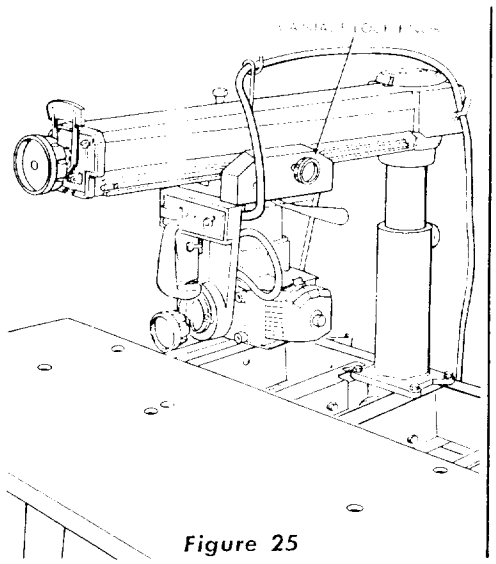

Figure 25

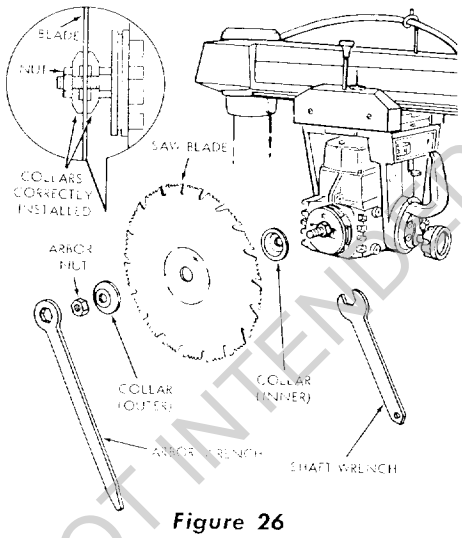

Figure 26

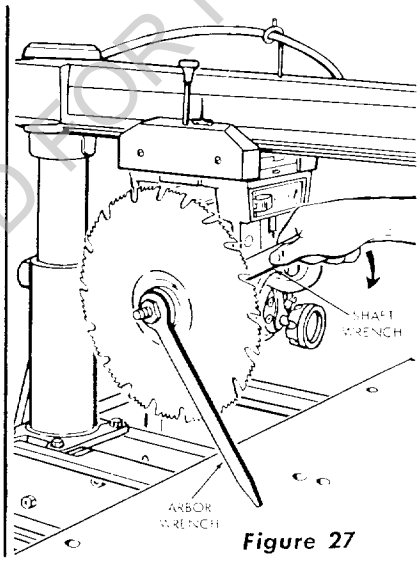

Figure 27

n. Loosen the bevel lock knob, lift the latch pin handle, and rotate the motor to a horizontal position. (See figure 22.) Tighten the bevel lock knob.

o. Move the radial arm to 0° position and lock it by tightening the arm latch handle. Tighten the carriage lock knob.

3. Installing Front Table

a. Place the large front table board on the table supports, locating it so that counterbored holes in the table match corresponding holes in the table supports. (See figure 23.)

b. Place a 1/4-inch flat washer on each of the seven 1/4-20 x 1-inch, pan-head screws and insert a screw (and washer) through each of the seven counterbored holes in the front table and through holes in table supports. One screw, near the center of the table is threaded into the U-clip nut mounted on the forward end of the No. 2 support.

c. Install six 1/4-inch lock washers and 1/4-20 hex nuts on all screws except the one that threads into the U-clip nut.

d. Run all nuts up onto the screws firmly but not tight at this time. Tighten the screw into the U-clip lightly.

e. In order to facilitate a later adjustment, check for ability to shift the front table on the supports by tapping it along edges with a mallet. (See figure 24.) If it will not slip, loosen the screws just enough to permit it to move slightly when struck with the mallet, yet requiring a firm "tap" to move it.

4. Squaring The Crosscut Travel

a. Loosen the carriage lock knob, move the motor to approximately center of table and tighten the carriage lock knob. (See figure 25.)

b. Install and tighten the saw blade as follows:

NOTE: Make sure the larger (flange) face of each collar is next to saw blade.

(1) Place the inner collar on motor shaft (figure 26) with flange next to saw blade (facing outward).

(2) Install the saw blade, outer collar and shaft nut. Tighten the nut as shown in figure 27.

c. Rotate the arm latch handle (knob) 1/4 turn counterclockwise. (See figure 28.) Make sure the yoke clamp handle and bevel lock knob are tight.

COPYRIGHTED - NOT INTENDED FOR RE-SALE

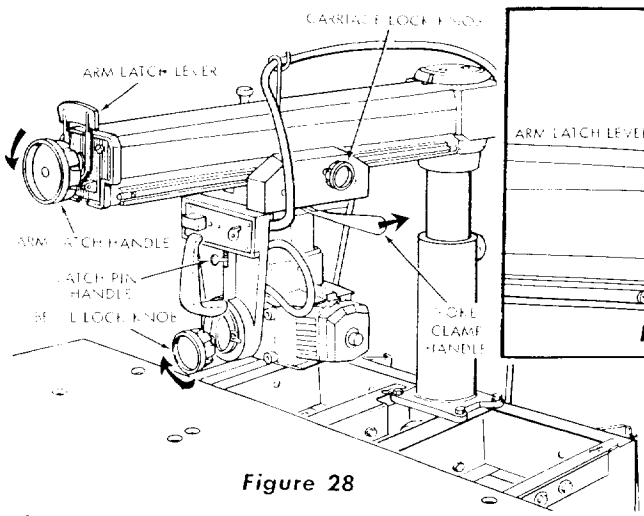

Figure 28

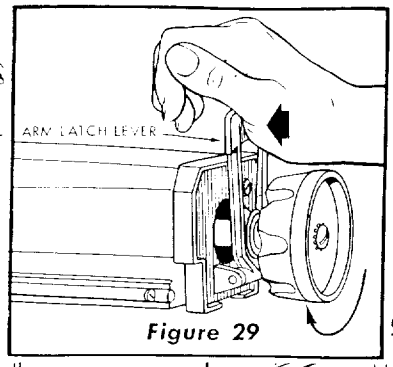

Figure 29

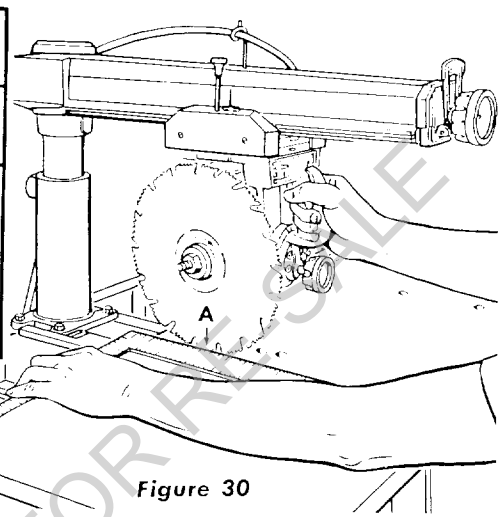

Figure 30

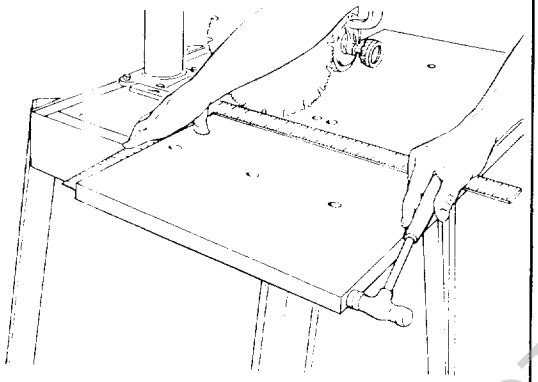

Figure 31

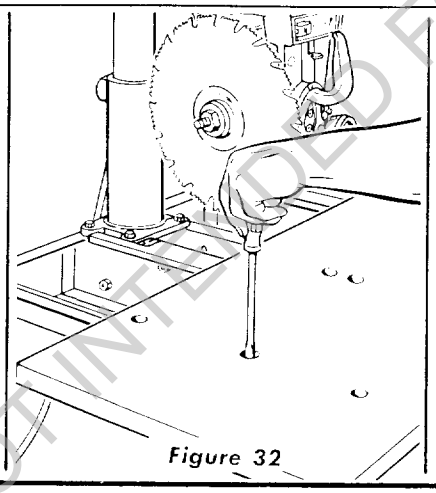

Figure 32

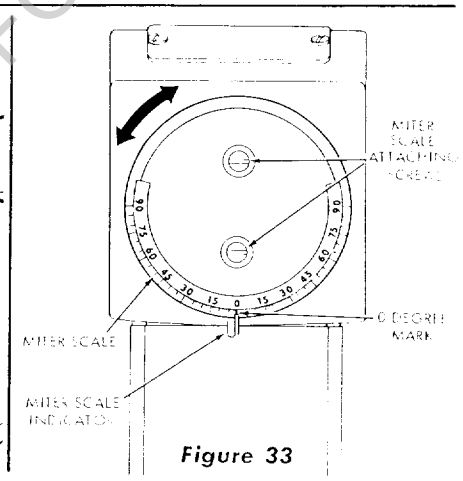

Figure 33

CAUTION: When moving the radial arm in any direction beyond 45° (left or right) always pull out the arm latch lever (figure 28) or loosen by rotating the lock knob counterclockwise until it stops to prevent damaging the arm lock pin. If damage occurs, the radial arm will not index properly at 0° and 45°, left or right.

d. Pull the arm latch lever outward and move radial arm approximately 10° to the right. Release the arm latch lever and move radial arm slowly toward the left until it "indexes". Do not bump or jar the arm. Tap the arm latch lever solidly with palm of the hand (figure 29) in order to seat the arm lock pin firmly in the arm latch.

e. Tighten the arm latch handle (figure 28). (Refer to paragraph entitled "Precision Indexing" for detailed instructions on indexing the radial arm.)

f. Lower the blade until it just clears the table.

g. Place a framing square on the table with the short leg against rear edge of table as shown in figure 30 and the long leg of the square just contacting a tooth of the saw blade. ((Position "A", figure 30.) Mark this tooth with a soft pencil.

h. When the carriage is moved back and forth on the radial arm, the saw tooth "A" should just touch the square at all positions. If saw tooth "A" does not touch the square at all points, make the following adjustments:

(1) If the saw tooth ("A", figure 30) moves into the square when moving the blade from the rear to the front of table, tap the left-hand front edge of table (figure 31) with the mallet.

(2) If saw tooth ("A", figure 30) moves away from the square when moving the blade from the rear toward the front of table, tap the right-hand front edge of table with the mallet.

(3) Recheck . . . and, if correct, tighten all table hold-down screws securely. (See figure 32.)

i. Loosen the two miter scale attaching screws (figure 33) and rotate the miter scale until the 0° mark is aligned with the indicator. Tighten screws and re-check.

NOTE: Adjustment of the crosscut travel will automatically correct the 45° index positions of the radial arm.

COPYRIGHTED - NOT INTENDED FOR RE-SALE

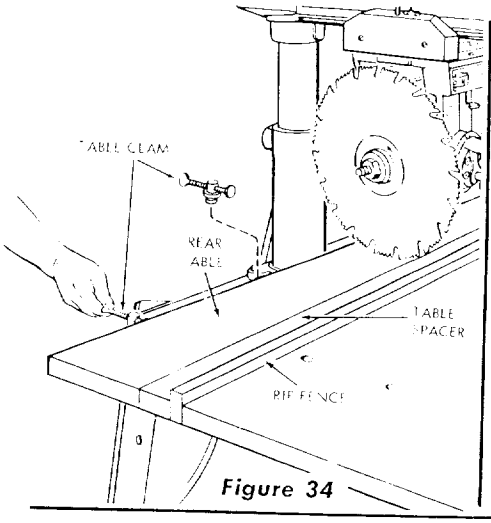

Figure 34

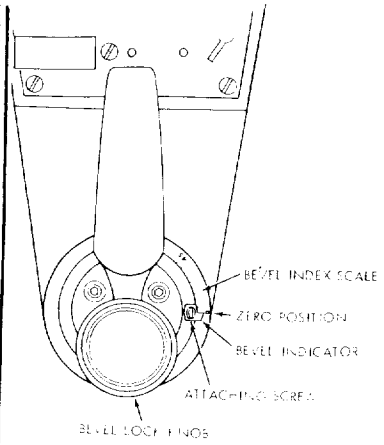

Figure 35

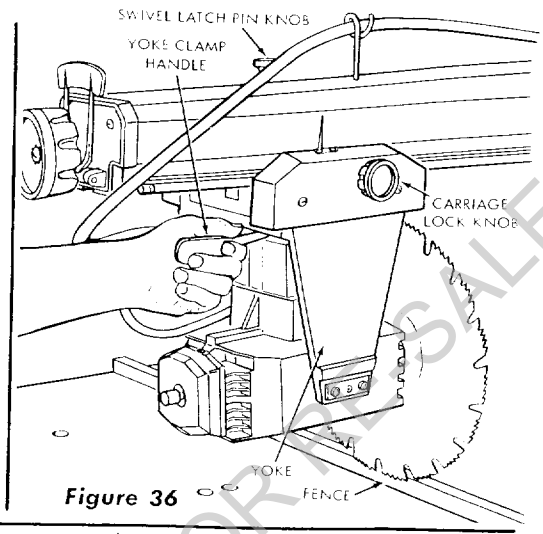

Figure 36

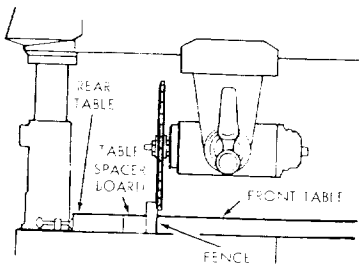

Figure 37

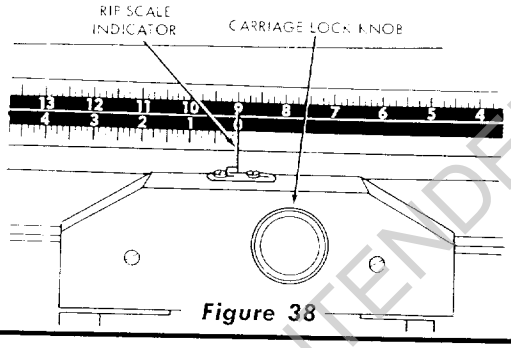

Figure 38

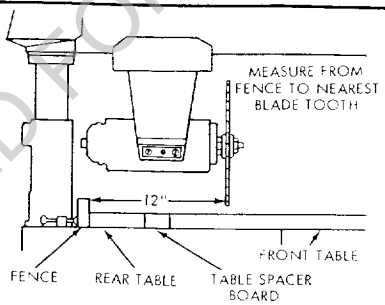

Figure 39

5. Installing Remaining Table Boards

a. Install the fence, rear table, table spacer and three table clamps. (See figure 34.)

b. Tighten the three table clamps firmly.

NOTE: The life of the laminated saw table can be greatly lengthened if a 1/4-inch piece of plywood is tacked to the table top after leveling. Then all cutting can be done in the added piece of plywood instead of the laminated table. It also eliminates the need for changing elevation settings when making right- or left-hand miter cuts.

6. Setting Bevel Index Scale

a. The bevel indicator (figure 35) should read 0° on the bevel index scale.

b. If not, loosen the indicator attaching screw, adjust the indicator to 0° and tighten the attaching screw.

7. Adjusting Rip Scale Indicators

NOTE: The rip scales and pointers are intended to be used for quick settings. For greater accuracy, take direct measurement between blade and fence.

a. With the fence in its normal position (next to the front table), loosen the yoke clamp handle (figure 36), lift up on the swivel latch pin knob and rotate the yoke as shown to index the yoke 90° from the cross-cut position. This will locate the saw blade between the motor and the fence. Lock the yoke by tightening the yoke clamp handle. (See figure 36.)

b. Loosen the carriage lock knob (figure 36) and move the motor until the edge of the blade, when spun by hand, just touches the front face of the fence. (See figure 37.) The rip-scale indicator (on the right-hand side of radial arm) should now read "0"-inches on lower portion of the "In-Rip" scale. (See figure 38.) If not, loosen screws and shift the indicator until it is aligned with the "0" mark, then tighten the screws.

NOTE: With the saw blade and fence in the position shown in figure 37, the lower portion of the "In-Rip" scale is used. If the fence is re-located at the extreme rear position, the upper portion of the "In-Rip" scale would be used.

c. The "Out-Rip" scale indicator on the left-hand side of radial arm is adjusted in essentially the same manner as the "In-Rip" indicator, except the fence should be at extreme rear and the blade positioned as shown in figure 39. With 12 inches measured between the fence (when in full rear position) and face of saw blade, the rip-scale indicator should be positioned to read 12 inches on the upper portion of the "Out-Rip" scale.

NOTE: With the saw blade and fence in the position shown in figure 39, the upper portion of the "Out-Rip" scale is used. If the fence is moved to normal position (at the rear of front

COPYRIGHTED - NOT INTENDED FOR RESALE

table) the lower portion of the "Out-Rip" scale is used.

d. Loosen the yoke clamp handle, lift up on the swivel latch pin knob and return the blade to the 90° position.

8. Installing the Guard

a. Remove the saw blade as follows:

(1) Move the carriage slightly rearward of mid-position on radial arm and tighten the carriage lock knob.

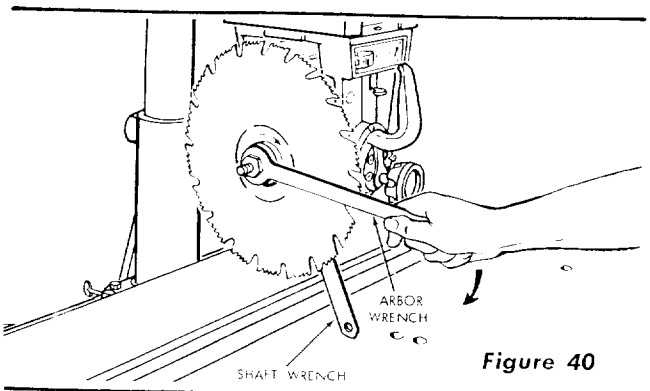

Figure 40

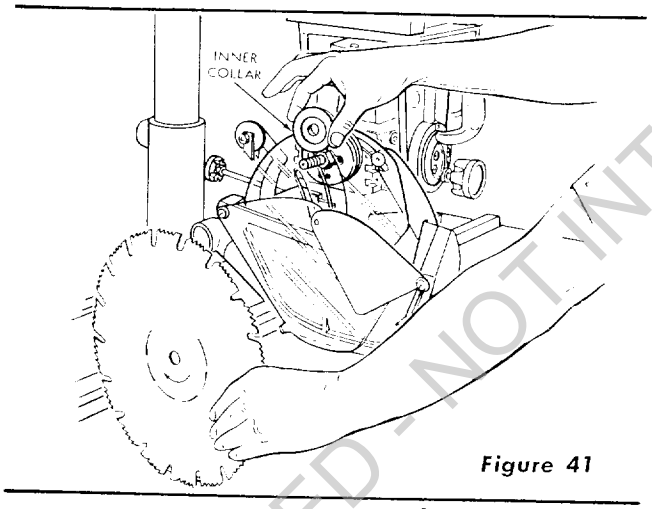

Figure 41

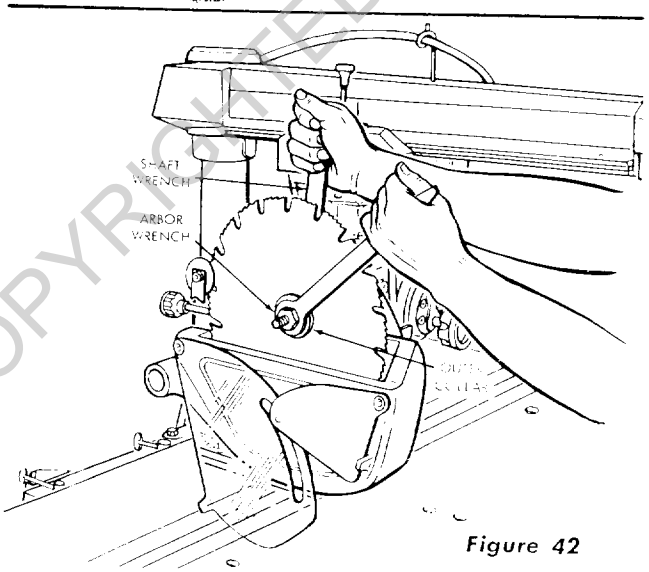

Figure 42

(2) Elevate the saw blade 30 turns of the elevation crank.

(3) Position wrenches as shown in figure 40.

(4) Remove shaft nut, outer collar, saw blade and inner collar.

b. Hold the guard in upside-down position and slide it into position on the motor shaft, allowing it to hang by the slot in the inner (clear plastic) assembly. (See figure 41.)

c. Slide the inner collar on the motor shaft (with the flat side facing outward), then place the saw blade on the shaft. Make sure the teeth are pointed for proper saw rotation.

d. Place the outer collar on the shaft with the flat side facing the saw blade. Start the shaft nut (left-hand threads) on the shaft and tighten the shaft nut securely. (See figure 42.)

e. Rotate the guard until the knob is in front and tighten the knob to secure the guard in position.

POWER SUPPLY AND MOTOR CONNECTIONS

1. Motor Specifications

The AC motor used in this saw is a capacitor start, non-reversible type, having the following specifications:

Horsepower	4.5 (developed) @ 240V. 4.0 (developed) @ 120V.
Voltage	120/240
Amperes	16.8/8.4
Hertz	60
Phase	Single
RPM	3450
Rotation (viewed from saw blade end)	Clockwise

CAUTION: This saw is wired for 240-volt operation. Connect to a 15-ampere branch circuit and use a 15 ampere, time-delay fuse. (If the motor is re-connected for 120-volt operation, connect to a 20-ampere branch circuit and use a 20-ampere, time-delay fuse.)

ELECTRICAL CONNECTIONS

WARNING: Changes in electrical connections should be made by a qualified electrician.

1. This saw motor is wired at the factory for 240-volt, 60 cycle, AC service as shown in figure 43 and described in paragraph entitled, "Connections for 240-volts AC". Provisions have been made to operate the saw motor on 120 volts, 60-cycle, AC as described in paragraph entitled "Connections for 120-Volts AC". However, for satisfactory saw operation it is strongly recommended that it be operated at 240 volts. If any of the following conditions exist or are suspected the saw should definitely be operated on a 240-volt source.

a. Continuous heavy-duty use.

b. Undersize wiring in circuit from motor to power source, or overloaded circuit.

c. Low voltage from power source to motor (which may be due to overloaded power source).

COPYRIGHTED - NOT INTENDED FOR RE-SALE

2. **Connections for 240-Volts AC (See figure 43.)** The following connections have been made in the motor terminal box at the factory for 240-volt saw operation.
   a. The YELLOW and BLUE leads in the motor terminal box are connected to the WHITE cord lead, bare ends twisted together and a wire nut installed as shown in figure 43.
   b. The BROWN lead (from overload protector) is not connected but has been insulated to prevent short circuiting inside the motor terminal box.
   c. The ORANGE, BLACK and WHITE leads are connected together, bare ends twisted and a wire nut installed.
3. **Connections for 120-Volts AC (See figure 44.)** When connecting the motor for 120-Volts operation, make sure the wires inside the motor terminal box have been reconnected as follows:
   a. Remove the capacitor cover from motor terminal box by removing four attaching screws.
   b. Connect the YELLOW, WHITE and BLUE leads in the motor terminal box to the WHITE cord lead. (The black motor cord lead is already connected to the overload protector.)
   c. Connect the BLACK and BROWN leads to the ORANGE lead.
   d. Twist bare ends of wires together and install a wire nut on each connection.

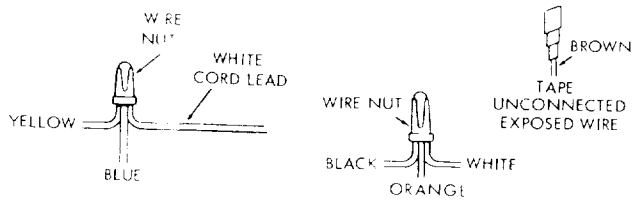

240 Volts
Figure 43

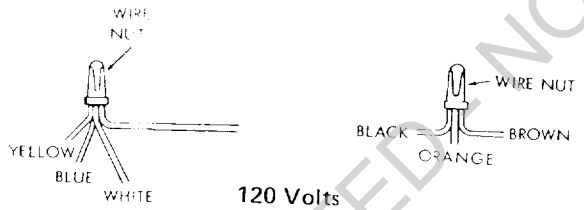

120 Volts
Figure 44

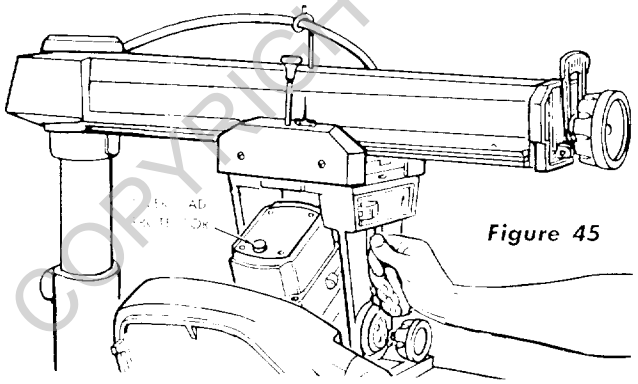

Figure 45

   e. Push all leads carefully into motor terminal box and install the capacitor cover.
   f. Modify the power cord as follows:
      (1) Cut off the existing molded, 240-volt plug.
      (2) Attach an appropriate 120-volt, three-conductor plug, being sure to connect the green ground wire to the grounding pin.
      (3) Connect to a 20-ampere branch circuit and use a 20-ampere, time-delay fuse.

MOTOR SAFETY PROTECTION

The saw motor is equipped with a manual-reset thermal overload protector (figure 45), designed to open the power line circuit when the motor temperature exceeds a safe value.

1. If the protector opens the line and stops the saw motor, press the saw switch to the "OFF" position immediately and allow the motor to cool.
2. After cooling to a safe operating temperature, the overload protector can be closed manually by pushing in the red button on the motor capacitor cover. If the red button will not snap into place immediately, the motor is still too hot and must be allowed to cool for a while longer. (An audible click will indicate protector is closed.)
3. As soon as the red button will snap into running position, the saw may be started and operated normally by pulling out the saw switch to the "ON" position.
4. Frequent opening of fuses or circuit breakers may result if motor is overloaded, or if the motor circuit is fused with other than those recommended. Do not use a fuse of greater capacity without consulting the power company.
5. Although the motor is designed for operation on the voltage and frequency specified on motor nameplate, normal loads will be handled safely on voltages not more than 10% above or below the nameplate voltage. Heavy loads, however, require that voltage at motor terminals equals the voltage specified on nameplate.
6. Most motor troubles may be traced to loose or incorrect connections, overloading, reduced input voltage (such as small size wires in the supply circuit) or when the supply circuit is extremely long. Always check connections, load and supply circuit when the motor fails to perform satisfactorily. Check wire sizes and lengths with the table in the next paragraph.

WIRE SIZES

The following table lists recommended wire sizes for connecting the motor to the power source. These sizes should be maintained for trouble-free operation of the saw. (Extension cords should be three-conductor.)

Length of the Conductor	Wire Size Required (American Wire Gauge Number) 240 Volt Lines	120 Volt Lines
50 feet or less	No. 14	No. 12
100 feet or less	No. 12	No. 10
100 feet to 150 feet	No. 10	No. 8
150 feet to 200 feet	No. 8	No. 6
200 feet to 400 feet	No. 6	No. 4

NOTE: For circuits of greater length, the wire size must be increased proportionately in order to deliver ample voltage to the saw motor.

COPYRIGHTED - NOT INTENDED FOR RE-SALE

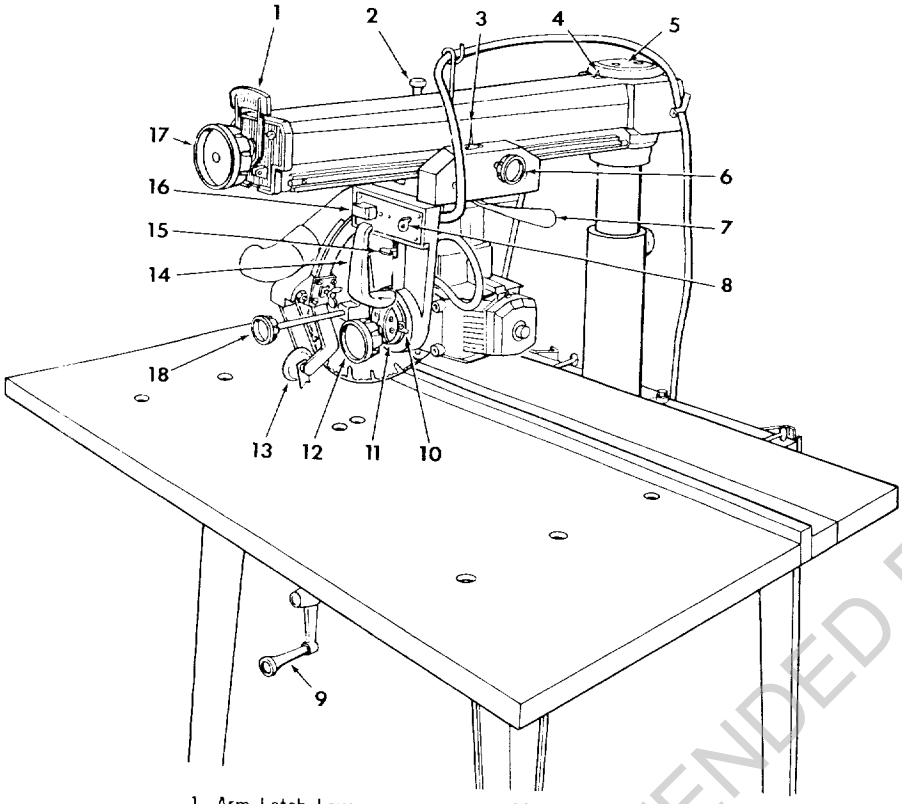

1. Arm Latch Lever
2. Swivel Latch Pin Knob
3. Rip Scale Indicator
4. Radial Arm Indicator
5. Radial Arm Scale
6. Carriage Lock Knob
7. Yoke Clamp Handle
8. Switch Lock and Key
9. Elevation Crank
10. Bevel Index Indicator
11. Bevel Index Scale
12. Bevel Lock Knob
13. Anti-Kickback and Spreader Assembly
14. Bevel Index Handle
15. Latch Pin Handle
16. On-Off Switch
17. Arm Latch Handle
18. Guard Clamp Assembly

Figure 46

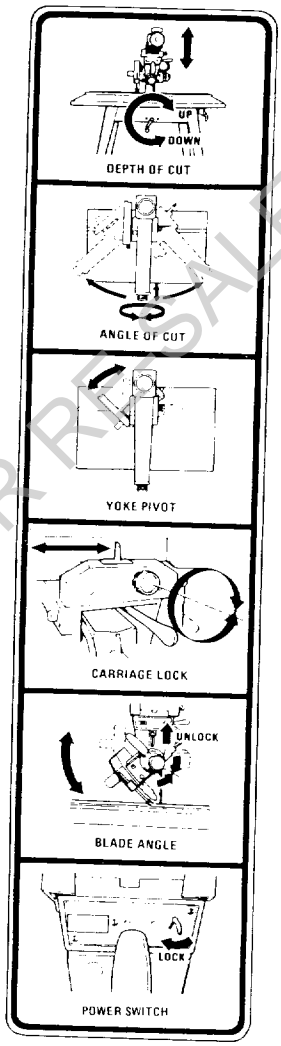

Figure 47

LOCATION AND FUNCTION OF CONTROLS

A series of six diagrams are located on the top surface of the radial arm in order to designate the controls that must be used in basic "set-ups" and operating procedures. (See figures 46 and 47.) The operator should become familiar with these diagrams and operation instructions that follow before operating the saw.

1. "Depth of Cut"

a. The diagram shows the elevation crank (9, figure 46) which is used to raise and lower the saw blade.

b. Clockwise rotation raises the blade . . . counterclockwise rotation lowers it. One complete turn of the handle will raise or lower the saw blade 1/8-inch.

2. "Angle of Cut"

CAUTION: When moving the radial arm in any direction beyond 45° (left or right), always pull out the arm latch lever (1, figure 46), or loosen the lever by rotating the arm latch handle (knob) counterclockwise until it stops, to prevent damaging the arm lock pin. Damage of this nature would prevent proper indexing of the radial arm at 0° and 45° positions (left or right).

a. Two controls are involved in releasing, securing and indexing the angle of the radial arm. These are: arm latch handle, (17, figure 46) and arm latch lever (1, figure 46).

WARNING: The saw should never be operated with the saw blade outside of the table area, even though the radial arm can be rotated a full 360° and locked in any position.

b. The arm is unlocked from any position by a slight counterclockwise rotation of the arm latch handle (17, figure 46) and is locked in any desired angular position by rotating the arm latch handle clockwise until tight. The radial arm has positive stops at 0° and 45° left and right, and is released from these index positions by unlocking the arm latch han-

COPYRIGHTED - NOT INTENDED FOR RESALE

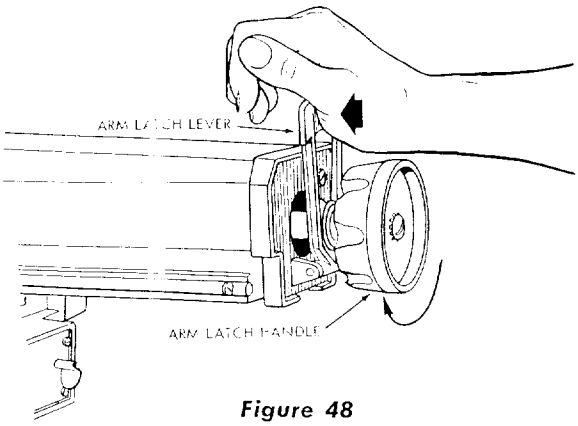

Figure 48

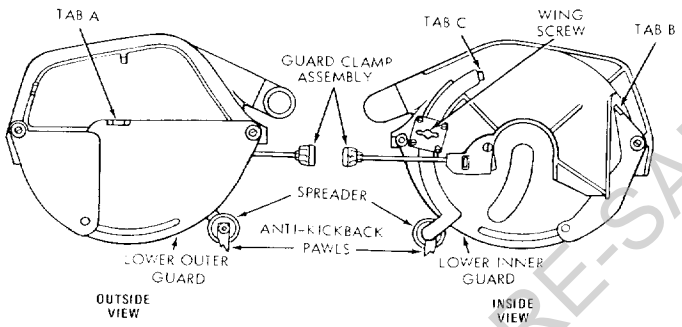

Figure 49

dle (17, figure 46) 1/4-turn and pulling out the arm latch lever (1 figure 46).

c. For most positive and accurate settings at the index positions, the following is recommended:

(1) If the radial arm is already indexed, rotate the arm latch handle (17, figure 46) **1/4 turn counterclockwise from the locked position,** pull out the arm latch lever (1) and move the radial arm off the index position. Release the arm latch lever (1).

(2) Move the radial arm into the desired index position (do not bump or jar it) and push on the arm latch lever (1, figure 46) solidly with the palm of the hand. (See figure 48). This is very important as it insures proper seating of the arm lock pin in the arm latch, thus always returning the arm to the correct position.

(3) Lock the radial arm by rotating the arm latch handle (17, figure 46) clockwise until tight.

3. "Yoke Pivot"

a. Two controls are used in this operation. They are: swivel latch pin knob (2, figure 46) and yoke clamp handle (7, figure 46).

b. The swivel latch pin automatically indexes the yoke at each 90° position. Lift the spring-loaded knob to release it.

c. The yoke clamp handle (7, figure 46) locks the yoke to the carriage in any position. Pull the handle forward to release the yoke; push the handle rearward to secure the yoke.

4. "Carriage Lock"

a. The carriage lock knob (6, figure 46) is rotated clockwise to secure the carriage on the radial arm, and counterclockwise to release it.

b. When performing a square crosscut or angle cut, the carriage lock knob must be rotated counterclockwise until the carriage is free to travel along the arm. This knob should be tightened except when the operator is ready to grasp the bevel index handle (14, figure 46) and make a cut.

5. "Blade Angle"

a. The two controls used in angular positioning and indexing of the motor to provide the desired saw blade angle are: bevel lock knob (12, figure 46) and latch pin handle (15, figure 46.)

b. The bevel index scale (11, figure 46) indicates the angular position of the motor with respect to horizontal from 0° to 90° in either vertical position.

c. The latch pin handle (15, figure 46) automatically indexes the motor at 0°, 45° and 90° up and down. Lift the latch pin handle to release it. At any other position, the latch pin handle does not engage.

d. The bevel lock knob (12, figure 46) locks the motor to the yoke when the motor is in any position. Rotate it clockwise to lock; counterclockwise to unlock.

e. The lift-tabs (A and B, figure 49) on the guard assembly are provided for use under certain conditions. In order to prevent the inner or outer lower guards from binding **(with power off)**, lift lower guards with tabs (A or B, figure 49) while lowering the saw blade to the table in a bevel position.

6. "Power Switch and Key"

a. This saw cannot be operated without the key, and likewise, the key cannot be removed from the lock while the saw motor is running.

b. To release the switch lever, insert the key in the slot and turn it counterclockwise until it stops. Rotate the key clockwise to lock the switch.

c. To start the saw, engage the forefinger under left side of switch lever and pull it outward.

d. To stop the saw, simply "bump" the switch lever with finger or thumb — pushing it inward.

WARNING: When leaving the saw unattended, lock the ON-OFF switch and remove the key.

ADJUSTING GUARD, ANTI-KICKBACK AND SPREADER ASSEMBLY, FOR RIPPING

WARNING: Never position the guard or anti-kickback assembly with power ON; nor position anti-kickback pawls by grasping pawls or spreader.

1. Check and Adjust the Spreader as follows:

a. Loosen the wing screw and with tab (C, figure 49)

COPYRIGHTED - NOT INTENDED FOR RE-SALE

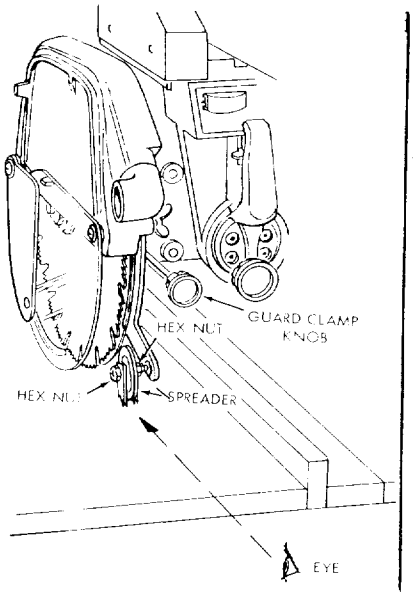

Figure 50

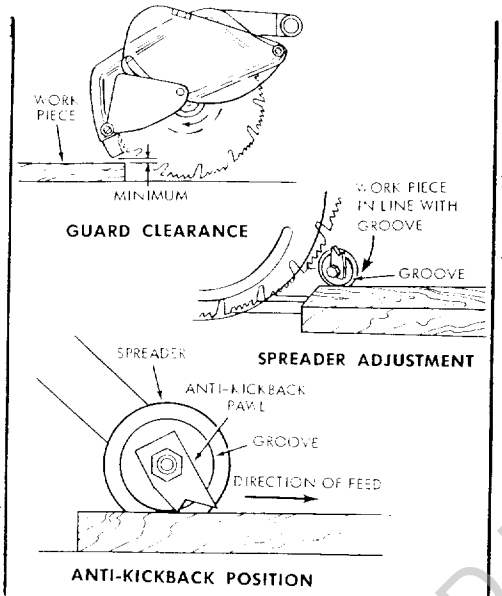

Figure 51

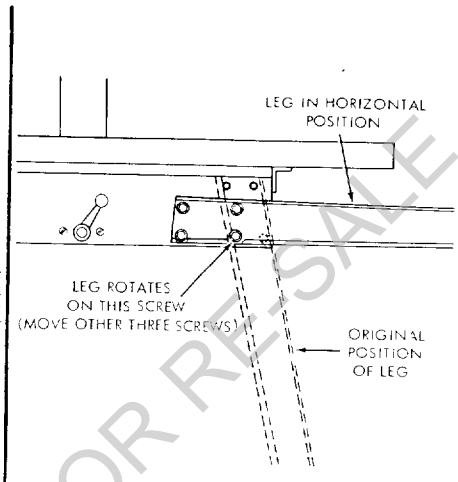

Figure 52

position the anti-kickback and spreader assembly to near the bottom of the blade. Tighten the wing screw.

b. Sight (visually) to check for proper alignment of spreader with saw blade, as shown in figure 50. If the spreader is not aligned, adjust it as follows:

(1) Loosen two hex nuts, one on each side of spreader figure 50).

(2) Rotate hex nuts with fingers until the spreader is directly in line with saw blade.

(3) Tighten both hex nuts firmly.

2. Adjust the guard and anti-kickback assembly as follows:

a. Position the saw blade the proper distance from the fence to produce the desired width of the rip cut. Tighten the carriage lock knob. Also, make sure the arm latch handle, yoke clamp handle and bevel lock knob are tight.

b. Plug in the power cord, pull out the **on-off** switch lever to start the motor.

c. Carefully lower the saw blade with the elevation crank until the saw blade cuts into the table surface to a depth of approximately 1/32-inch.

d. Push in the **on-off** switch to stop the motor and allow the blade to come to a complete stop.

e. Place the workpiece to be ripped in the position shown in figure 51 (top illustration).

f. Loosen the guard clamp knob (figure 50) and rotate the guard so that it just clears the work-piece (figure 51). Tighten the guard clamp knob.

g. Move the workpiece to the location shown in figure 51 (middle illustration).

h. Loosen the wing screw (figure 49) and with tab "C" position the anti-kickback and spreader assembly until the groove on the spreader is even with the top surface of the workpiece. (See figure 51). Tighten the wing screw.

i. Before making the cut, check the effectiveness of the anti-kickback pawls by sliding the workpiece under the pawls in the direction of feed and then attempting to slide it in the reverse direction — the direction of kickback. If the pawls do not catch, readjust with wing screw and tab "C" (figure 49).

j. Periodically check and maintain sharp tips on the anti-kickback pawls.

PRECISION INDEXING

Experienced operators of precision equipment, such as this Craftsman Radial Saw, normally acquire the habit of indexing the machine in one direction only, whenever a new setting is made in preparation for a different operation. For example: when moving the radial arm to a new position, it is advisable to move it slightly past the desired index position, then return it slowly and carefully to latch and lock it. Figure 48 shows the radial arm being securely indexed by "tapping" it with the palm of the hand. Swivel indexing and bevel indexing can be accomplished in a similar manner. This indexing technique tends to neutralize any stresses imposed upon saw components and contributes to the high degree of accuracy the saw is capable of producing when operated expertly.

POSITIONING LEGS FOR TABLE OR TRUCK BED OPERATION OF SAW

Holes are located in the saw base that permit legs to be extended outward horizontally, permitting the saw base to rest on a table, bench, or on a pickup truck. This is accomplished by removing three attaching screws in each leg, rotating the leg to a horizontal position and re-installing the three screws. (See figure 52.) The lower inside screw at each location need not be removed, but should be loosened just enough to permit the leg to rotate on it as an axis.

COPYRIGHTED - NOT INTENDED FOR RE-SALE

BASIC SAW OPERATIONS

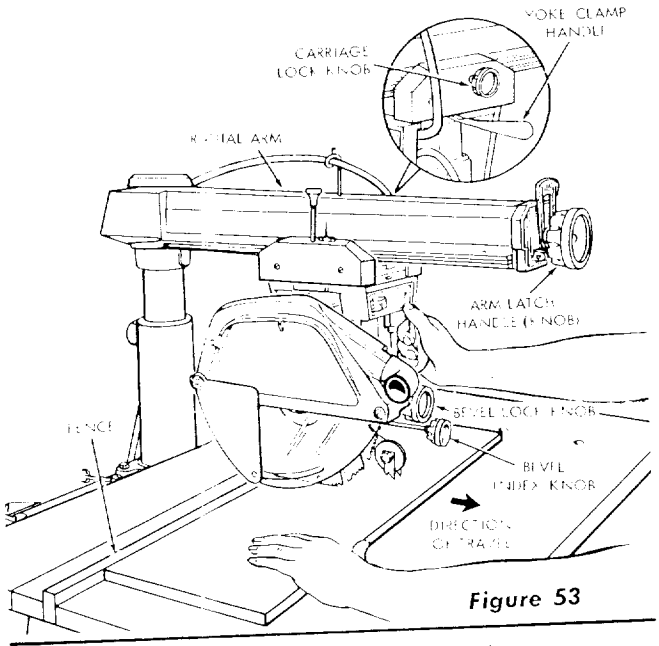

Figure 53

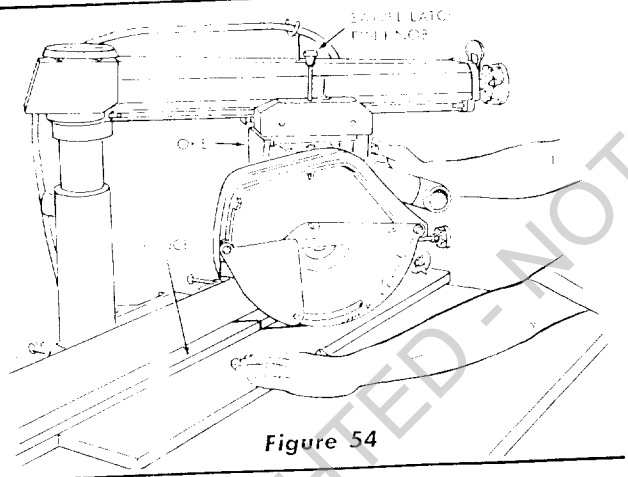

Figure 54

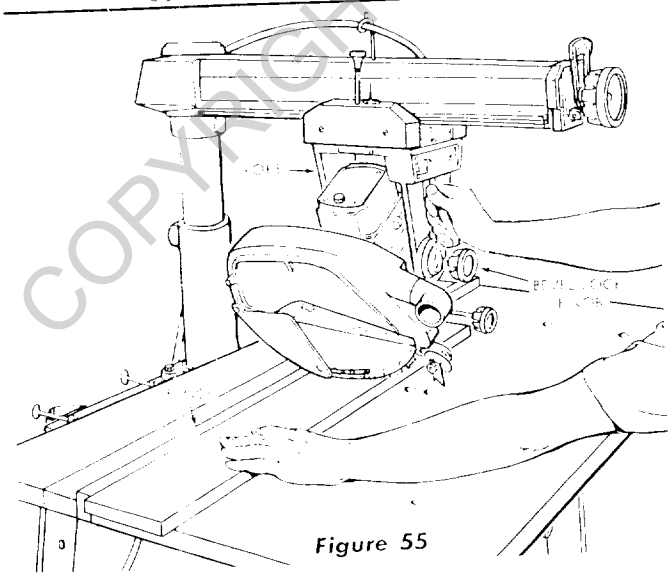

Figure 55

Your Craftsman 12-inch Radial Saw is an extremely versatile tool, capable of performing innumerable cuts with sufficient accuracy to satisfy both amateur and professional woodworking requirements. Basic saw operations are summarized into six categories, explained and illustrated in the following paragraphs. A manual entitled **"The Radial Saw"** is available at your nearest Sears Retail Store or Catalog Order House. This manual contains considerable data and project ideas applicable to the radial saw.

NOTE: Refer to paragraphs under "OPERATION" for illustrations and descriptions of controls.

REQUIREMENTS FOR CROSSCUT (OPERATIONS 1 THROUGH 4)

1. Arm latch handle (knob) must be tight.
2. Work must be held firmly against table and fence.
3. Blade should be sharp and correctly set.
4. Hands must be kept well away from saw blade.
5. Yoke clamp handle must be in locked position.
6. Bevel index knob must be tight.
7. For operations No. 3 and No. 4, observe additional instructions under paragraph, "Operating Controls", "Blade Angle".

OPERATION No. 1 — CROSSCUT

Crosscutting is the process of sawing a 90° (square) cut as shown in figure 53. The radial arm, yoke and bevel settings are all indexed at 0° and locked. The board being cut (usually across the grain) is held firmly against the fence and the carriage is pulled forward along the radial arm to perform the desired cut. The carriage should be returned to the full rearward position and the saw blade allowed to come to a complete stop before removing the boards from the saw table.

OPERATION No. 2 — MITER CROSSCUT

Miter crosscutting is the process of sawing a board at any angle other than a 90° (square) cut. (See figure 54.) The 45° miter angle is a popular one, since two boards cut to 45° can be assembled to form a 90° corner for producing a square or rectangular frame. The radial arm is set to the desired angle of cut; yoke and bevel settings indexed at 0° (and locked) as in square crosscutting. The board being cut is held firmly against the fence and the carriage pulled forward along the radial arm to perform the desired cut. As in "Operation No. 1", the carriage should be returned to full rear position and the saw blade allowed to come to a complete stop before removing the boards from saw table.

OPERATION No. 3 — BEVEL CROSSCUT

Bevel crosscutting is the process of sawing at 90° (square) across the board with the saw blade set at an angle other than 90° to the saw table. (See figure 55.) The radial arm and yoke are indexed at 0° and locked, but the bevel is set to the desired angle of cut. The board is held firmly against the fence and the carriage pulled forward along the radial arm to produce the cut. The carriage should be returned to full rearward position and the saw blade allowed to come to a complete stop before removing the boards from saw table.

COPYRIGHTED - NOT INTENDED FOR RE-SALE

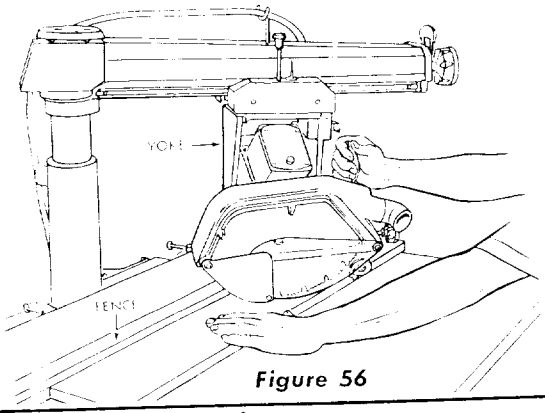

Figure 56

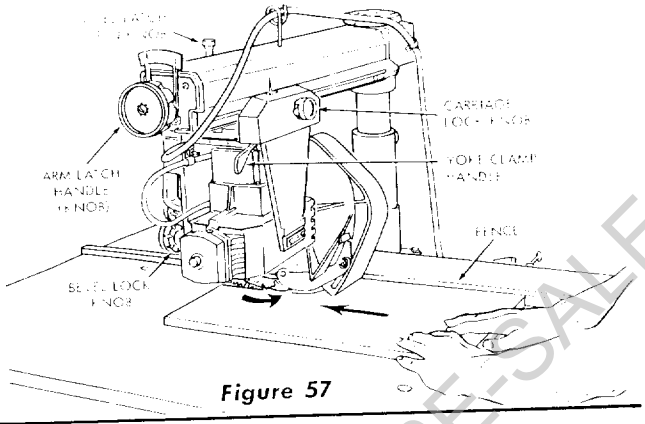

Figure 57

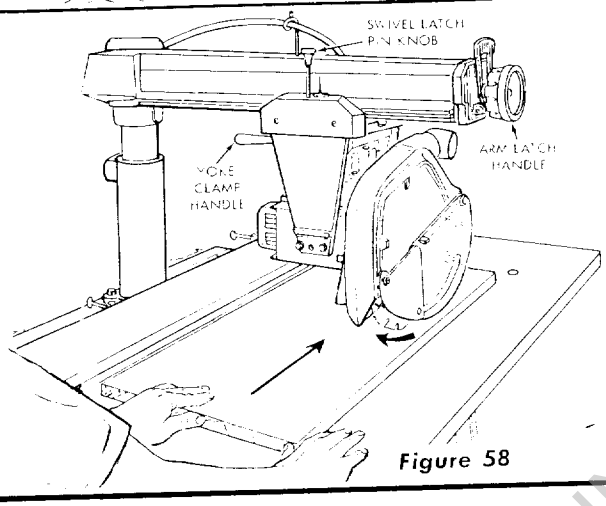

Figure 58

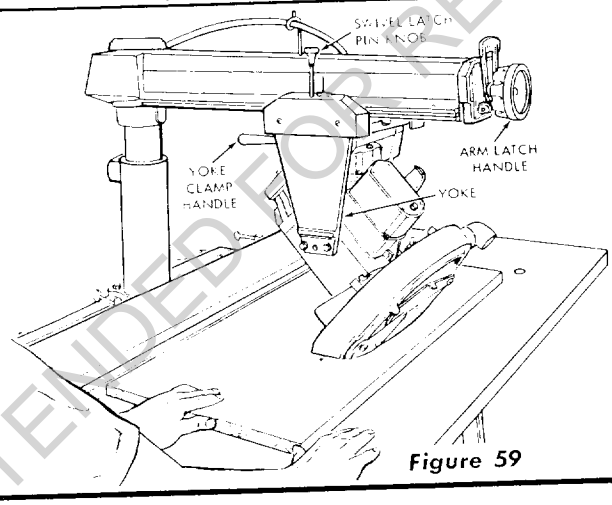

Figure 59

OPERATION No. 4 — COMPOUND CROSSCUT

Compound crosscutting is the combination of miter and bevel crosscuts. (See figure 56.) The radial arm and bevel are set to produce the desired cut; the yoke is indexed at 0° and locked. The board is held firmly against the fence and the carriage pulled forward along the radial arm to produce the cut. Again, the carriage should be returned to full rearward position and the saw blade allowed to come to a complete stop before removing boards from saw table.

REQUIREMENTS WHEN RIPPING
(OPERATIONS 5 AND 6)

1. Carriage lock knob must be tight.
2. Radial arm must be locked in 0° position.
3. Work must be held firmly against table and fence while feeding through.
4. Guard and anti-kickback mechanism must be properly set. Observe instructions in paragraph, "Adjusting Guard, and Anti-Kickback and Spreader Assembly, for Ripping."
5. Blade should be sharp and correctly set.
6. Hands must be kept well away from saw blade. When ripping narrow or short stock, always use a push-board.

OPERATION No. 5 — OUT-RIPPING AND IN-RIPPING

Ripping operations are performed with the saw blade parallel to the fence. When the yoke is positioned to place the saw blade between the motor and fence it is in the "in-rip" position. When the blade is at the front (motor between the blade and fence) it is in the "out-rip" position.

In-Ripping (See figure 57.) The radial arm and bevel are indexed at 0° and locked, but the yoke is turned 90-degrees in a clockwise direction (viewed from above) from the crosscut position. Thus, when standing in front of the saw, the blade would be rotating counterclockwise. After positioning the guard and anti-kickback mechanism the workpiece is fed from the right-hand side of the saw, as shown in figure 57. The "In-Rip" scale is on the right-hand side of radial arm.

Out-Ripping (See figure 58.) The radial arm and bevel are indexed at 0° and locked, but the yoke is turned 90-degrees in a counterclockwise direction (viewed from above), from the crosscut position. When standing in front of the saw, blade would be rotating clockwise. After positioning the guard and anti-kickback mechanism the workpiece is fed from the left-hand side of the saw, as shown in figure 58. The "Out-Rip" scale is on the left-hand side of radial arm.

OPERATION No. 6 — BEVEL RIPPING

Bevel ripping is either in-ripping or out-ripping as described above, except the saw blade is tilted out of perpendicular to the saw table surface. Figure 59 shows a typical bevel out-ripping operation. The radial arm is indexed at 0° and locked, the bevel is set to the desired bevel angle and the yoke is positioned for in-ripping (saw blade at rear) or out-ripping (saw blade at front), as required. All requirements and observations applicable to normal ripping operations also apply to bevel ripping.

COPYRIGHTED — NOT INTENDED FOR RE-SALE

INSTRUCTIONS TO OPERATOR

Be sure to read the following instructions carefully before operating the saw.

WARNING: Do not connect power cord until the following steps have been satisfactorily completed:

a. Assembly and Installation.

b. Examination and operating familiarity with ON-OFF switch, elevation control, bevel control, rip control, and miter control.

c. Review and understanding of the operating procedures which follow.

CAUTION: Always disconnect the power cord when changing the cutting tool, changing the set-up, or making adjustments.

ALWAYS return the carriage to the full rear position after each crosscut type operation.

1. The saw should be bolted down.
2. Set carriage lock before moving machine.
3. Raise front of arm by placing a one-inch thick board under the two front legs so the carriage will not roll forward due to gravity.
4. Use only accessories that are designed for this machine.
5. The saw work area should have adequate overhead, non-glare light and adequate surrounding work space.
6. The saw should be positioned when ripping so neither the operator nor a casual observer is forced to stand in line with the saw blade.

CAUTION: DO NOT cycle the motor switch **ON** and **OFF** rapidly, as this might cause the saw blade to loosen. In the event this should ever occur, allow the saw blade to come to a complete stop and re-tighten the motor shaft nut normally, not excessively.

7. A large proportion of saw accidents is caused by dull, badly set, improperly filed cutting tools, and by gum or resin adhering to cutting tools. Such conditions cause the material to stick, jam, stall the saw, or kick-back at the operator. Cracked saw blades should be discarded immediately. A saw blade can become cracked if it wobbles or if it is not in balance. Avoid potential injury by proper cutting tool and machine maintenance.
8. Gloves should not be worn while operating the saw. Loose flowing garments, jewelry (rings, wrist watches, etc.), and neckties should never be worn. Long sleeves should be rolled to above the elbows.
9. Goggles or an eye shield should always be used. Ear protectors (ear plugs or muffs) should be used during extended periods of operation.
10. Provide proper support for the workpiece, based on its size and the type of operation to be performed; hold the work firmly against the fence. Use a push stick or board when ripping short work (under 12-inches long), or narrow work.
11. Never use a length stop or a fixed guide on the free end or edge of a workpiece. Never hang onto or touch the free end of the workpiece or a free piece that is cut off, while the power is on and/or the saw blade is rotating. In short, in any through-sawing operation the cut-off piece must never be confined — it must be allowed to move laterally.
12. Do not leave a long board unsupported so the spring of the board causes it to shift on the table. A support should be used to catch the end of the board you are not supporting.
13. Never climb on or ~~near~~ stand on the saw. ~~when power is on.~~ Never leave the saw with power on, or before the cutting tool has come to a complete stop. Lock the motor switch and put away the key when leaving the saw.
14. Avoid awkward hand positions, where a sudden slip could cause a hand to move into a saw blade or other cutting tool. Never reach in back of or around the cutting tool with either hand to hold down the workpiece.

CAUTION: Never reposition guard with power **ON.**

15. Always position the nose of the guard and the anti-kickback pawls for rip type operations. Also make sure the cutting tool, arbor collars and arbor nut are installed properly. Keep guards in place; use the proper guard.
16. Do not use any blade or other cutting tool marked for an operating speed in excess of lower than the design speed of the saw. Never use a cutting tool larger in diameter than the diameter for which the saw was designed. For greatest safety and efficiency when ripping, use the maximum diameter blade for which the saw is designed, since under these conditions the spreader is nearest the blade.
17. The use of abrasive or cut-off wheels, or wire wheels can be dangerous and is not recommended. (Abrasive or cut-off wheels are used to saw many different materials including metals, stone, and glass.)
18. Do not position the arm so the operation you are performing permits the cutting tool to extend beyond the edges of the table.
19. Safety is a combination of operator common sense and alertness at all times when the saw is being used.

WARNING: Do not allow familiarity (gained from frequent use of your saw) to become *commonplace*. Always remember that a careless fraction of a second is sufficient to inflict severe injury.

COPYRIGHTED - NOT INTENDED FOR RESALE

TROUBLESHOOTING

Even though the finest materials and precision workmanship have been incorporated into your Craftsman saw, it is reasonable to expect some wear after long periods of use. Adjustment facilities have been built into the saw to compensate for this wear. Looseness due to wear, rough handling, or improper adjustments will usually be indicated by reduced accuracy or the inability of the saw to perform as intended. The usual operating "troubles" are listed in the following paragraphs with the necessary corrections described and illustrated.

1. LOOSENESS OF COLUMN TUBE IN COLUMN SUPPORT — ELEVATION CRANK OPERATES ROUGHLY, OR CHATTERS WHEN ROTATED.

When this condition exists, square crosscuts are likely to be difficult to make and repeated cuts inaccurate. Adjust the column tube key as follows:

a. Checking for Looseness of Column Tube in Column Support.

(1) Tighten arm latch handle.

(2) Grasp the arm latch handle with one hand and hold fingers of other hand at parting line between column tube and column support. (See figure 60.)

(3) Apply gentle side force to the radial arm in opposing directions. Any looseness between column and column support (indicated by arrow in figure 60) can be felt with fingers.

(4) If looseness can be felt, perform the following operations:

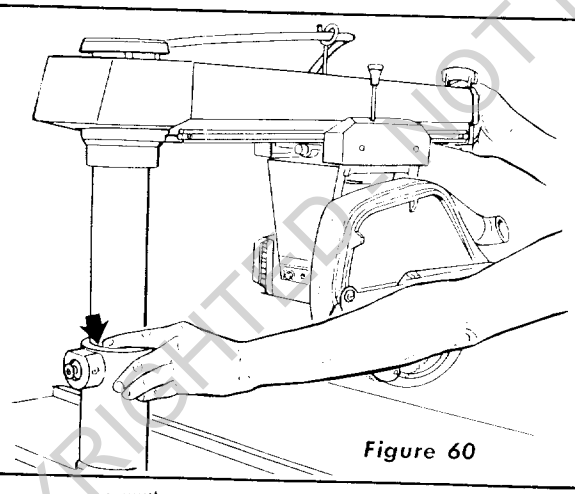

Figure 60

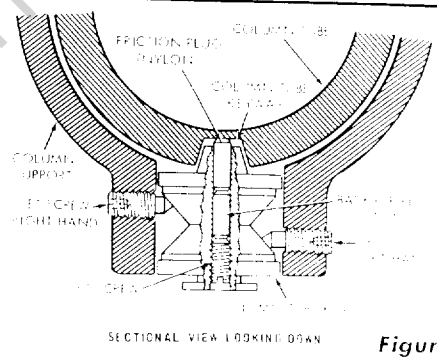

Figure 61

NOTE: Before attempting to adjust the column tube key, the function of this adjustment should be understood. Figure 61 shows a sectional view through the column tube support (looking downward) at the column tube key location. By loosening the left-hand set screw and tightening the right-hand set screw the column tube key will be forced tighter into the column tube keyway. Conversely, loosening the right-hand set screw and tightening the left-hand set screw, will retract the column key out of the column tube keyway. The set screw in outer end of column tube key must be loosened while adjustment is being made and tightened with medium firmness after the adjustment has been completed. This screw applies pressure on the nylon friction plug and provides smoother elevation movement of column tube. This set screw should be tightened to provide maximum smoothness of operation. Right and left positions are given with operator facing the saw — standing in front of saw table.

b. Adjusting Column Tube Key

(1) Loosen the set screw in center of column tube key. (See figure 61.)

(2) Loosen the left-hand set screw 1/4 turn.

(3) Tighten the right-hand set screw.

(4) Tighten left-hand set screw.

(5) Rotate the elevation crank to raise and lower the radial arm. If too tight, loosen the right-hand set screw slightly and check again for smooth operation. When correct, tighten the left-hand set screw.

(6) Tighten the set screw in center of column tube key (figure 61) until smoothest operation is obtained.

2. BLADE DOES NOT MAKE SQUARE CUTS AND ACCURATE REPEAT CUTS CANNOT BE MADE.

If this condition exists the trouble might be due to one, or a combination of, the following conditions.

a. Looseness between column tube and column support.

Adjust as described in preceding paragraph 1, a and b.

b. Crosscut travel not properly adjusted.

Refer to paragraph, "Adjusting Crosscut Travel." If crosscut travel cannot be adjusted as described, refer to paragraph i, below.

c. Table supports not properly adjusted.

Correct adjustment of table supports can be checked with satisfactory accuracy without removing the table boards, by checking at the various positions on the top surface of the table, described in paragraph, "Adjusting Table Supports Parallel to Radial Arm".

d. Saw blade not square with table.

Adjust as described in paragraph, "Squaring the Saw Blade to the Table".

COPYRIGHTED - NOT INTENDED FOR RESALE

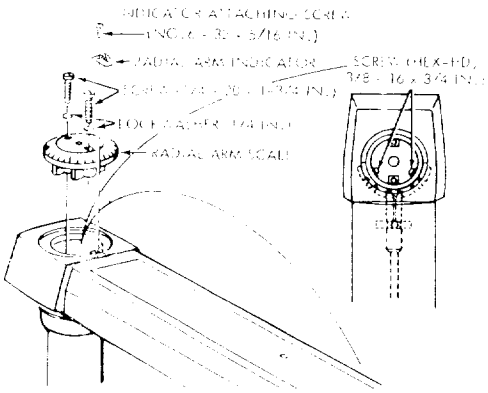

Figure 62

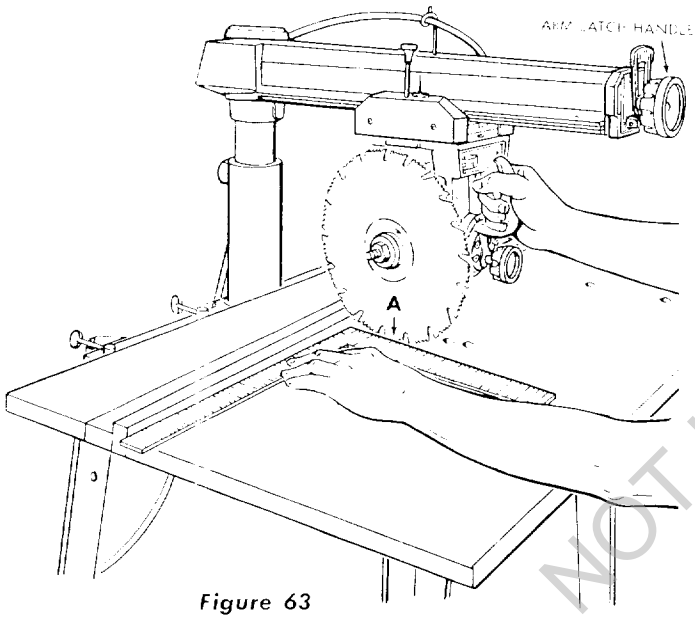

Figure 63

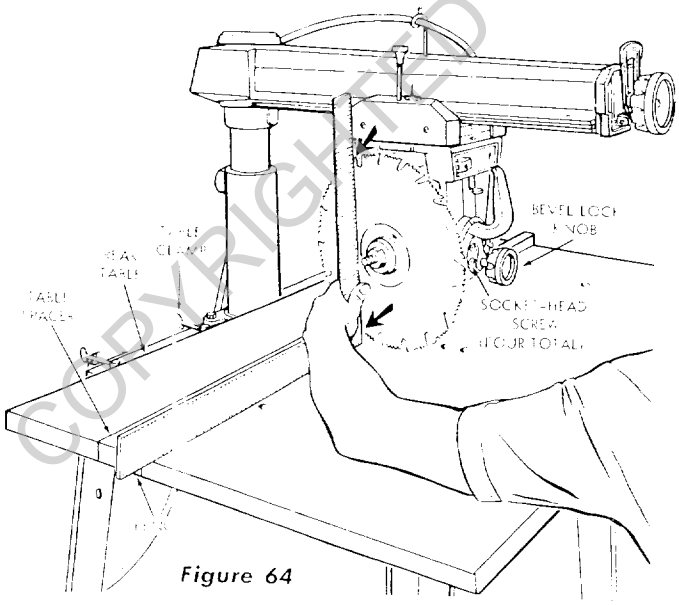

Figure 64

e. Bearings Loose on Tracks.

Adjust carriage bearings as described in subsequent instructions.

f. Yoke Does Not Index Properly.

Check for proper yoke indexing noting that the swivel latch pin fits into its detents properly. If swivel latch pin housing screws (located under left-hand carriage cover) are loose, re-adjust blade for "heel" as described in paragraph, "Blade Heels to the Right or Left".

g. Yoke Clamp Does Not Tighten the Yoke When In Full Rearward Position.

Refer to paragraph, "Yoke Clamp Handle Adjustment" in subsequent instructions.

h. Improper Indexing of Radial Arm for Miter Cuts.

Refer to paragraph, "Precision Indexing", in the "Operation" section.

i. Adjusting the Arm Latch To Correct Crosscut Travel Mis-Adjustment.

In some remote cases, due to rough handling, etc., the crosscut travel cannot be squared by the usual method. (Refer to "Squaring the Crosscut Travel".) If this condition is encountered, it will be necessary to adjust the arm latch as follows:

(1) Remove the indicator attaching screw and radial arm indicator. (See figure 62.)

(2) Remove two 1/4-20 x 3/4-inch screws (figure 62) to free the radial arm cap, and lift out the cap.

(3) Rotate the arm latch handle (figure 63) one-quarter turn counterclockwise but do not pull it out.

(4) Loosen (do not remove) two 3/8-16 hex-head screws (figure 62) located inside the column tube.

(5) Move radial arm slightly in the proper direction to make saw tooth ("A", figure 63) follow edge of square when the saw blade is moved in and out in a "cross-cut" manner.

(6) Re-tighten the hex-head screws inside radial arm then tighten the arm latch handle (figure 63.)

(7) Recheck travel of blade tooth ("A") with the square (figure 63), to make sure that tightening the screws did not affect the adjustment.

(8) After the cross-cut has been accurately squared, install the radial arm cap with two 1/4-20 x 1-3/4-inch screws and 1/4-inch lockwashers. Then, install the radial arm indicator with its attaching screw finger tight.

(9) Set the radial arm indicator to 0° and tighten the attaching screw securely.

j. Squaring the Saw Blade to the Table.

(1) Place a framing square on the table with the short leg against the saw blade as shown in figure 64. Do not allow the square to rest against a "set-out" tooth of the saw blade.

(2) If the saw blade is square with the table top, the square will contact the hollow-ground blade at the points shown by arrows in figure 64. If the

COPYRIGHTED - NOT INTENDED FOR RE-SALE

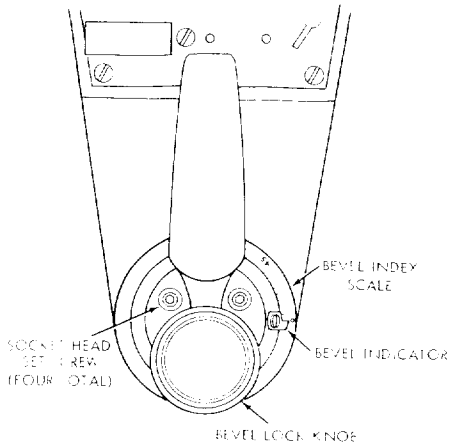

Figure 65

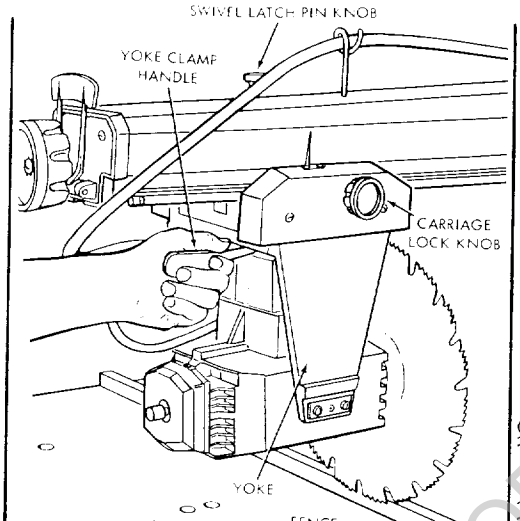

Figure 66

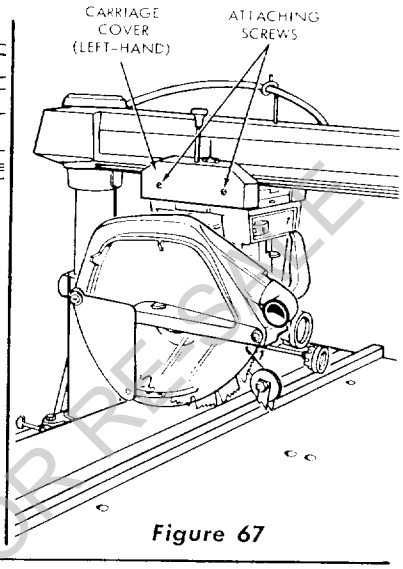

Figure 67

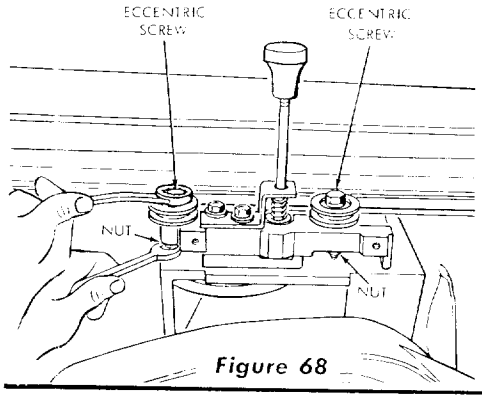

Figure 68

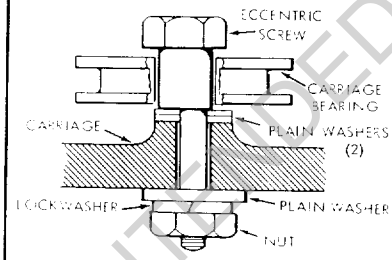

Figure 69

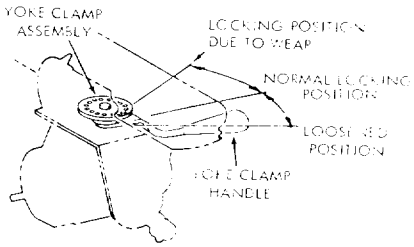

Figure 70

square does not touch the saw blade as shown (with square leg held firm against the table top), perform the following adjustments:

(a) Loosen the bevel lock knob (figure 65) several turns in order to provide room for inserting the hex-L wrench into heads of the socket-head screws.

(b) Using a 1/4-inch hex-L wrench, loosen just slightly the four socket-head screws (figure 65).

(c) Tilt the motor until saw blade is square with the table top as shown in figure 64. Then, while holding the square firmly against the saw blade and table top, apply moderate force against lower part of saw blade with the thumb until approximately 1/32-inch clearance exists between the square and lower edge of saw blade. This is to compensate for the possible slight shifting of the motor while the socket-head screws are being tightened.

(d) Tighten the socket-head screws (figure 65) and bevel lock knob. It may be necessary to perform several trial operations before the saw blade remains perfectly square with the table after tightening the four screws.

(3) After completing this adjustment, set the bevel indicator to zero.

k. Adjusting Carriage Bearings.

To test for looseness between the carriage bearings and tracks on radial arm, lock the yoke clamp handle (figure 66) grasp the motor and carriage assembly firmly with both hands and apply a firm rocking motion. If looseness exists, perform the following steps:

(1) Remove left-hand carriage cover (figure 67).

(2) Loosen nuts (figure 68) just enough to permit the eccentric screws to turn. (See figure 69.)

(3) Rotate the eccentric screws (figure 68) a partial turn (left or right) as required to take up looseness.

(4) Hold the heads of eccentric screws (figure 68) in the position established in the preceding step and tighten nuts on underside of carriage. Correct adjustment exists when there is no play between the carriage and radial arm, and yet the carriage moves freely.

(5) Install the left-hand carriage cover (figure 67).

l. Yoke Clamp Handle Adjustment.

The normal locking position of the yoke clamp handle (figure 70) is approximately midway between the two sides of the yoke. When sufficient wear has occured

COPYRIGHTED - NOT INTENDED FOR RESALE

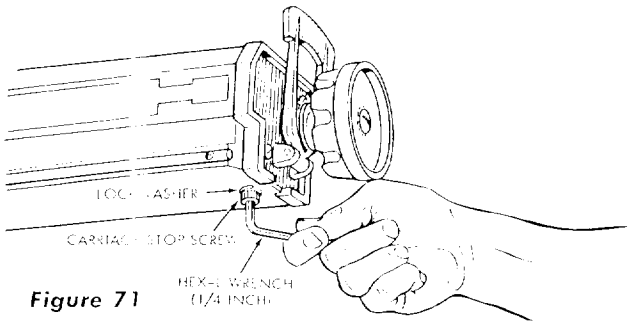

Figure 71

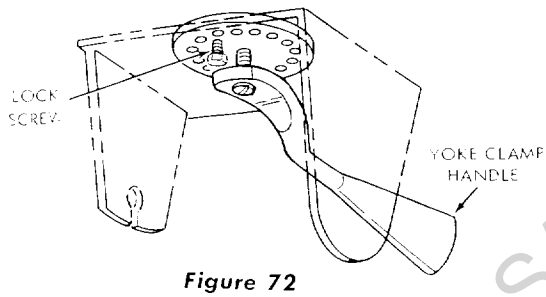

Figure 72

to permit the handle to move considerably to the rear, or strike the yoke before locking, the handle may be adjusted as follows:

(1) Set the yoke clamp handle to "Normal Locking Position" (figure 66) which is just slightly ahead of the mid-position of the handle.

(2) Remove the carriage stop screw and lockwasher (figure 71) with a 3/16-inch hex-L wrench.

(3) Grasp the motor and carriage assembly and, holding it parallel to the radial arm until all bearing rollers are free of their tracks, move it carefully off the end of the arm.

(4) Rest the motor and carriage assembly on saw table and remove the lock screw (figure 72).

(5) Using a screwdriver, rotate the yoke clamp assembly (figure 73) clockwise until the next hole will line up with the lock screw. (See figure 72.) Usually rotating the yoke clamp assembly one hole will correct this adjustment. However, in some extreme cases it may be necessary to rotate it two holes or more.

(6) Install and tighten the lock screw. (See figure 72.)

(7) Hold the motor and carriage assembly parallel to radial arm and start the rear bearings onto the tracks. Continue to hold the assembly parallel to the tracks until the forward bearings are on the tracks.

(8) Slide the carriage rearward on the radial arm and install the carriage stop screw and lockwasher (figure 71).

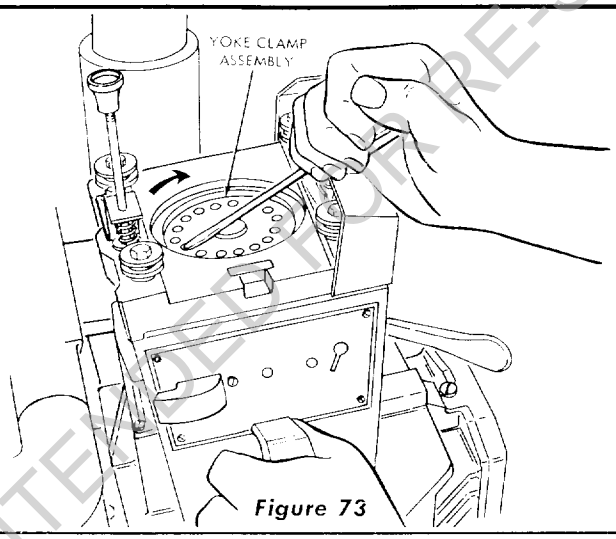

Figure 73

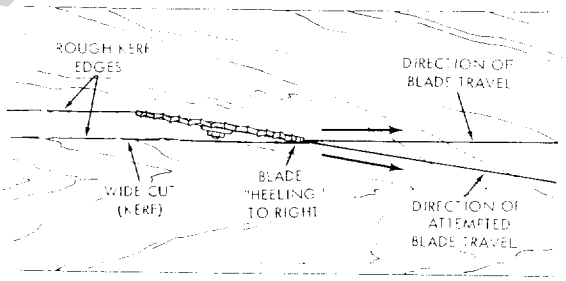

Figure 74

3. BLADE "HEELS" TO THE RIGHT OR LEFT.

"Heeling" is a term used to describe a condition where the saw blade is not aligned with the direction in which it is forced to travel. Figure 74 is a diagram showing the saw blade "heeling" to the right. Results of "heeling", even to a minor degree, can be detected by the tooth marks left on the edge of the saw kerf (cut edge) of the board. When using a hollow ground blade, even a small degree of "heel" will cause the wood to smoke as a result of the frictional heat produced. The various effects of "heel" are as follows.

a. Crosscutting

(1) Heeling to the right will tend to slide the work piece toward the right along the rip fence, as the cut is being made, and make a square cut almost impossible.

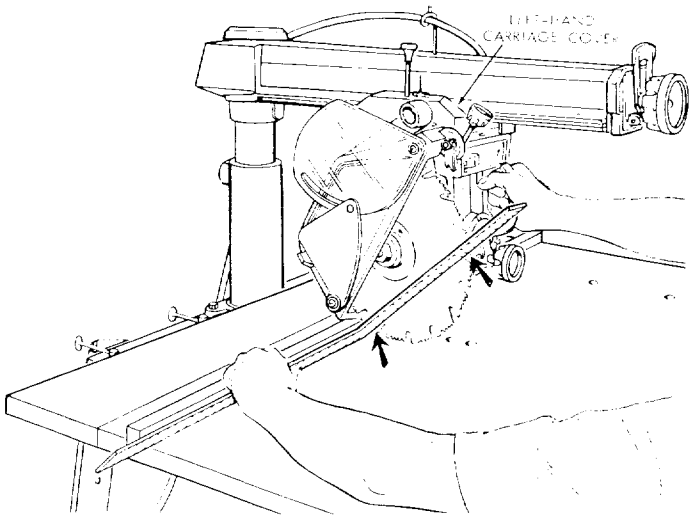

Figure 75

COPYRIGHTED - NOT INTENDED FOR RE-SALE

(2) Heeling to the left will tend to slide the board to the left along the fence.

b. Miter Cutting — Same as crosscutting, except to a lesser or greater degree, depending upon the angle.

c. In-Ripping

(1) Heeling to the right will force the work piece against the rip fence.

(2) Heeling to the left will force the work piece away from the fence.

d. Out-Ripping — The exact reverse of in-ripping.

e. Checking and Adjusting to Eliminate "Heeling".

(1) Loosen the guard clamp knob and tilt the guard upward at the front to expose the saw blade, as shown in figure 75.

(2) Place a square against the rip fence and the saw blade as shown in figure 75. The long leg of the square must be held firmly against the rip fence and table top and the short leg must not touch any of the teeth on the saw blade.

(3) If the square does not touch the hollow-ground blade at points shown in figure 75, a heel condition exists (either to the left or right). To correct the condition, proceed as follows:

(a) Remove the left-hand carriage cover (figure 75).

(b) Loosen the yoke clamp handle.

(c) Loosen (slightly) two hex-head screws (figure 76).

(d) Rotate the yoke until the gap between saw blade and square is eliminated.

(e) Lock the yoke with the yoke clamp handle and tighten the two hex-head screws (figure 76).

(f) Recheck for "heel" to make sure that tightening the screws did not affect the setting.

(g) Install left-hand carriage cover.

4. WOOD SMOKES AND MOTOR SLOWS DOWN OR STOPS WHEN RIPPING.

This condition can be caused by several conditions as follows:

a. Dull Blade or Warped Board.

Sharpen or replace the saw blade. Avoid the attempted use of severly warped material.

b. Crosscut Not Properly Squared.

Adjust as described in paragraph, "Squaring the Crosscut Travel".

c. Radial Arm Not Securely Locked in 0° Position.

Loosen the arm latch handle and refer to paragraph, "Precision Indexing".

d. Blade Heels to the Right.

Refer to paragraph "Blade Heels to the Right or Left."

5. BOARD BINDS, OR PULLS AWAY FROM FENCE, WHEN RIPPING.

Refer to "Adjusting Guard, Anti-kickback and Spreader Assembly, For Ripping".

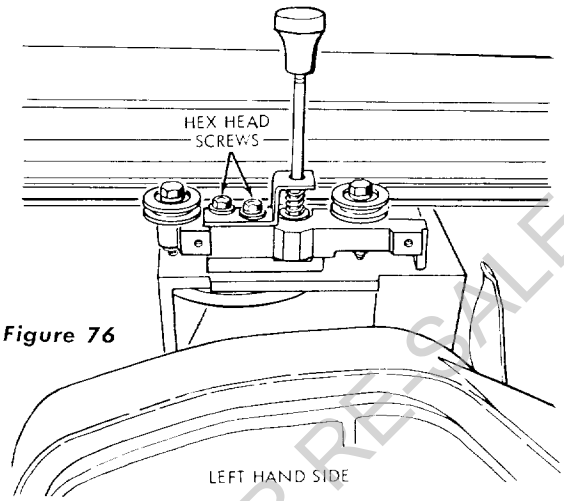

Figure 76

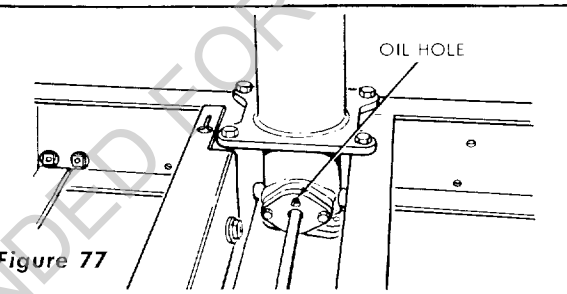

Figure 77

LUBRICATION

Your saw is precision built and should be kept clean and properly lubricated. Before describing the various points which may periodically require lubrication, IT IS MORE IMPORTANT TO FIRST MENTION THE VARIOUS POINTS WHICH SHOULD NOT BE LUBRICATED.

NO LUBRICATION REQUIRED

Do not lubricate carriage ball bearings or motor bearings as these are sealed ball bearings and require no added lubrication.

Do not lubricate between radial arm cap and radial arm.

PERIODICALLY LUBRICATE THESE POINTS

Use SAE No. 10W-30 automotive engine oil and refer to Parts List for locations. Apply a few drops of oil along the swivel latch pin only if the pin has a tendency to stick. Remove the left-hand carriage cover and use oil sparingly to prevent it from getting on the ball bearings or races.

A light film of oil should be wiped on the face of the column tube and keyway to lubricate the fit between the column tube, the key and column support.

Apply a few drops of oil to the bearing surfaces of the elevation crank shaft assembly. An oil hole is provided in the elevation shaft bearing bracket to facilitate the lubrication of the bearing support. (See figure 77.)

The thread on the elevation shaft assembly can be lubricated through the oil hole in the center of the radial arm cap.

CAUTION: Excessive oil at any location will attract airborne dust particles and sawdust.

COPYRIGHTED - NOT INTENDED FOR RE-SALE

TROUBLE SHOOTING CHART—MOTOR

NOTE: Motors used on wood-working tools are particularly susceptible to the accumulation of sawdust and wood chips and should be blown out or "vacuumed" frequently to prevent interference with normal motor ventilation.

TROUBLE	PROBABLE CAUSE	REMEDY
Motor will not run.	1. Protector open; circuit broken. 2. Low voltage.	1. Reset protector by pushing on red button, located on top of motor junction box (indicated by audible click). 2. Check power line for proper voltage.
Motor will not run and fuses "BLOW."	1. Short circuit in line cord or plug. 2. Short circuit in motor terminal box, or loose connections.	1. Inspect line cord and plug for damaged insulation and shorted wires. 2. Inspect all terminals in motor terminal box for loose or shorted terminals or worn insulation on wires.
Motor fails to develop full power. (Power output of motor decreases rapidly with decrease in voltage at motor terminals. For example: a reduction of 10% in voltage causes a reduction of 19% in maximum power output of which the motor is capable, while a reduction of 20% in voltage causes a reduction of 36% in maximum power output.)	1. Power line overloaded with lights, appliances and other motors. 2. Undersize wires or circuit too long. 3. General overloading of power company's facilities. (In many sections of the country, demand for electrical power exceeds the capacity of existing generating and distribution systems.) 4. Incorrect fuses in power line.	1. Reduce the line load. 2. Increase wire sizes, or reduce length of wiring. 3. Request a voltage check from the power company. 4. Install correct fuses.
Motor starts slowly or fails to come up to full speed.	1. Low Voltage — will not trip relay. 2. Starting relay not operating.	1. Correct low voltage condition. 2. Replace the relay.
Motor overheats.	1. Motor overloaded. 2. Improper cooling. (Air circulation restricted through motor due to sawdust, etc.)	1. Correct overload condition. 2. Clean out sawdust to provide normal air circulation through motor.
Starting relay in motor will not operate.	1. Burned relay contacts (due to extended hold-in periods caused by low line voltage, etc.) 2. Open relay coil. 3. Loose or broken connections in motor terminal box. 4. Shorted capacitor.	1. Replace relay and check line voltage. 2. Replace relay. 3. Check and repair wiring. 4. Test capacitors and replace if defective.
Motor stalls (resulting in blown fuses or tripped circuit breakers).	1. Starting relay not operating. 2. Voltage too low to permit motor to reach operating speed. 3. Fuses or circuit breakers do not have sufficient capacity.	1. Replace relay. 2. Correct the low line voltage condition. 3. Replace fuses or circuit breakers with proper capacity units.

CONTINUED ON NEXT PAGE

COPYRIGHTED - NOT INTENDED FOR RE-SALE

TROUBLE SHOOTING CHART—MOTOR (Con't.)

TROUBLE	PROBABLE CAUSE	REMEDY
Frequent opening of fuses or circuit breakers.	1. Motor overloaded. 2. Fuses or circuit breakers do not have sufficient capacity. 3. Starting relay not operating (motor does not reach normal speed.)	1. Reduce motor load. 2. Replace fuses or circuit breakers. 3. Replace relay.
Brake fails to work.	1. Brake assembly "hums" excessively or "chatters." 2. Failure of brake coil (short circuit or "open").	1. Replace the brake coil. 2. a. Check for foreign particles between the brake shoe inside diameter and shoulder of brake disc. b. Check for 0.020-inch clearance between brake shoe and brake disk. (Clearance is probably less than 0.020-inch.)

POWER TOOL GUARANTEE

During the first year, we will repair your Craftsman Radial Saw free of charge, if defective in material or workmanship.

This guarantee service is available by simply returning the saw to any Sears store throughout the United States.

COPYRIGHTED - NOT INTENDED FOR RE-SALE

CRAFTSMAN 12-INCH RADIAL ARM SAW, MODEL No. 113.29510

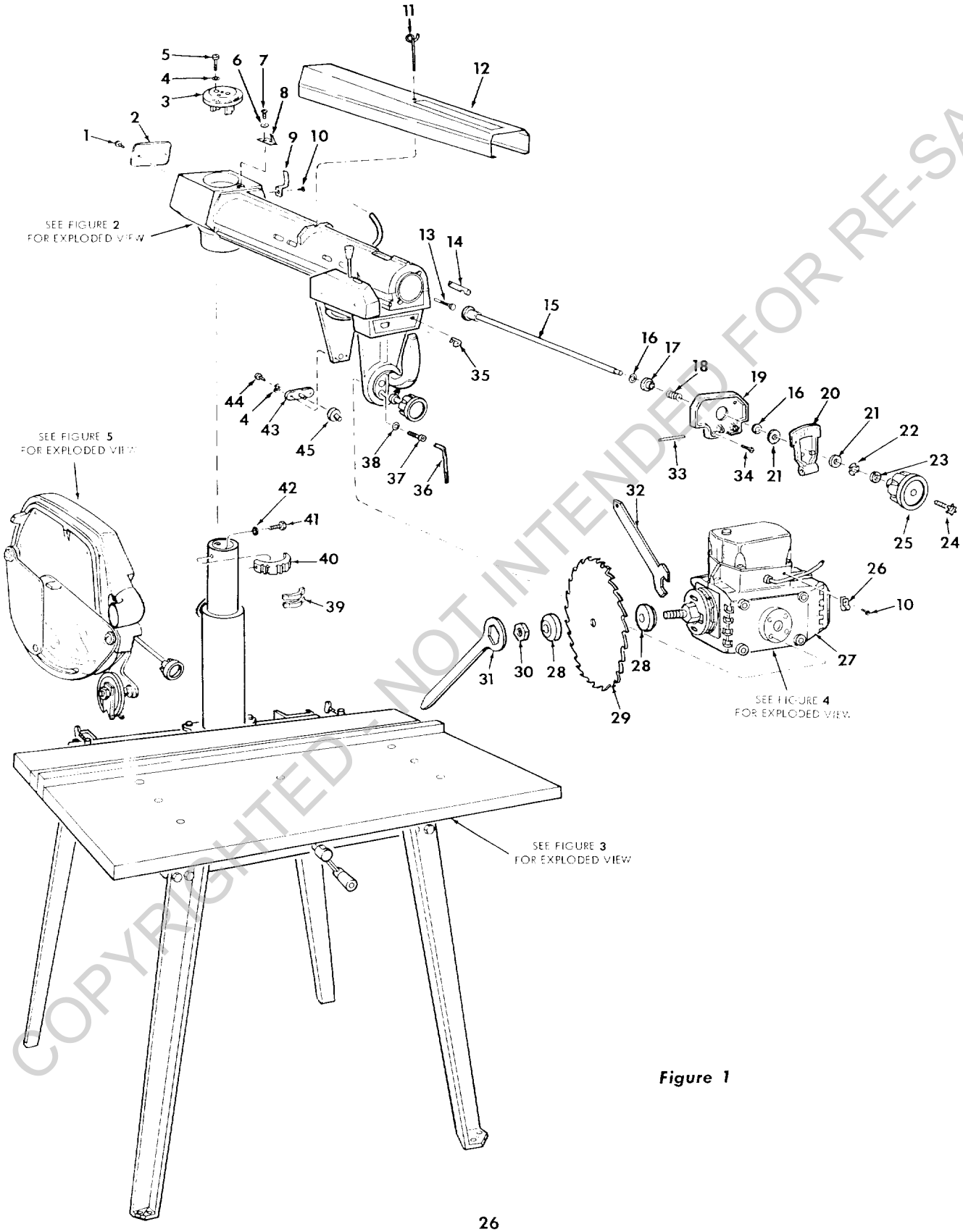

Figure 1

COPYRIGHTED - NOT INTENDED FOR RE-SALE

PARTS LIST

CRAFTSMAN 12-INCH RADIAL ARM SAW, MODEL No. 113.29510

All parts illustrated in Figures 1 through 6 and listed under part numbers may be ordered through any Sears retail store or Catalog order store. Order parts by mail from the Catalog order house which serves the territory in which you live. In several instances, part numbers are listed for COMPLETE ASSEMBLIES. All parts are shipped prepaid within the limits of the Continental United States.

WHEN ORDERING REPAIR PARTS, ALWAYS GIVE THE FOLLOWING INFORMATION AS SHOWN ON THIS LIST:

1. THE PART NUMBER
2. THE PART NAME
3. THE MODEL NUMBER 113.29510
4. THE NAME OF ITEM — 12-INCH RADIAL ARM SAW

Always order by Part Number — not by Key Number

FIGURE 1 PARTS LIST

Key No.	Part No.	Description
1	448033	Screw, Mach., No. 10-32 x 3/8, Type 23 C.I., Pan Hd. Slotted
2	63305	Plate, Cover
3	63303	Cap, Radial Arm
4	115109	*Washer, Lock 1/4 x .109 x .062
5	226310	*Screw, Mach., 1/4-28 x 1-3/4, Fil. Hd.
6	37935	Washer, Fiber, .140 x .250 x 1/32
7	9404351	Screw, Mach., No. 6-32 x 5/16, Type 23 C.I., Pan Hd.
8	63213	Indicator No. 1
9	63214	Clamp, Cord
10	448011	Screw, Mach., No. 8-32 x 3/8, Type 23 C.I., Pan Hd.
11	63221	Hook, Cord
12	63299	Trim, Radial Arm
13	30662	Screw, Arm Lock
14	30482	Pin, Arm Lock
15	37370	Shaft Assembly, Latch Arm
16	60044	Ring, Retaining
17	30489	Washer, Spring Support
18	30490	Spring, Arm Latch
19	63301	Cap, Trim
20	63302	Lever, Arm Latch
21	60076	Washer, Plain, .505 x 1-1/8 x 1/16
22	37373	Washer, Spring
23	60030	Washer, Plain, .505 x 1 x 1/32, Steel
24	455872	Screw, Mach., 1/4-20 x 1-3/8, Truss Hd., w/L/washer
25	63210	Handle
26	63139	Clamp, Cord
27	63234	Motor Assembly (See figure 4)
28	30494	Collar
29	60177	Blade, Saw, 12"
30	30495	Nut, Shaft
31	3540	Wrench, Arbor
32	63062	Wrench, Shaft
33	443151	Pin Groove, 3/16 x 1-3/4
34	436753	Screw, Mach., No. 10-32 x 3/4, Type 23 C.I., Pan Hd.
35	37861	Key, Safety Lock
36	37435	*Wrench, Hex. "L", 1/4 Across Flats
37	9421626	*Screw, Socket Hex. Hd., Cap, 5/16-18 x 1-1/2
38	30606	Washer, Index Handle
39	30661	Shoe, Brake
40	30479	Latch, Arm
41	9415837	*Screw, Mach., 3/8-16 x 3/4, Hex Hd.
42	131202	Washer, Lock, 3/8 S.A.E. Steel
43	63468	Support Assy., Motor
44	60021	*Screw, Mach., 1/4-20 x 7/16, Hex. Hd. Ind.
45	63469	Bushing, Rubber
Not Shown	63313	Owner's Manual For Craftsman 12" Radial Arm Saw Model 113.29510

* Standard Hardware Item — May be Purchased Locally.

NOTE: Shipping and handling charges for standard hardware items (identified by *) such as nuts, screws, washers, etc., make buying these items by mail uneconomical. To avoid shipping and handling charges, you may obtain most of these locally.

COPYRIGHTED - NOT INTENDED FOR RE-SALE

CRAFTSMAN 12-INCH RADIAL ARM SAW, MODEL No. 113.29510

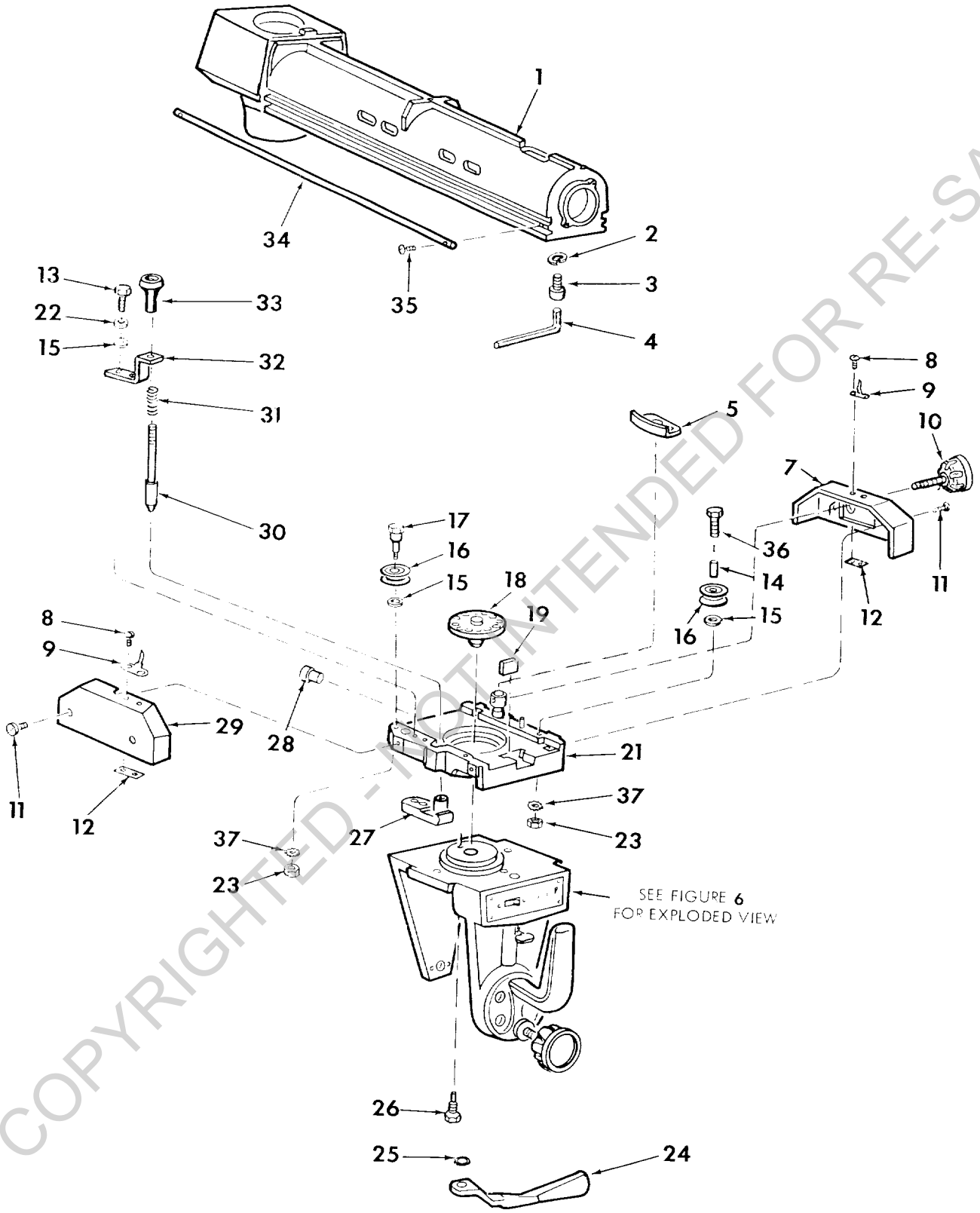

COPYRIGHTED - NOT INTENDED FOR RE-SALE

FIGURE 2 PARTS LIST

Key No.	Part No.	Description
1	63295	Arm, Radial
2	120214	*Washer, Lock, Med., 5/16 S.A.E., Steel
3	9421620	*Screw, 5/16-18 x 1/2, Socket-Hd., Cap, Steel
4	37435	*Wrench, Hex.-L, 1/4" Across Flats
5	63120	Shoe, Carriage Lock
7	63306	Cover, Carriage R.H.
8	436664	*Screw, Mach., No. 6-32 x 7/16, Pan Hd., Cad.
9	63253	Indicator, Rip Scale
10	63316	Knob, Carriage Lock
11	436751	*Screw, Mach., No. 10-32 x 5/8, Pan Hd., Cad.
12	30530	Nut, Twin
13	9415819	*Screw, Mach., 5/16-18 x 1-1/2, Hex. Hd. Ind., Steel
14	37388	Sleeve, Bearing
15	60040	Washer, Plain, .328 x 3/4 x 1/16
16	63117	Bearing, Carriage
17	37387	Screw, Eccentric
18	30566	Clamp Assembly, Yoke
19	30567	Bumper
21	63294	Carriage Assembly
22	131201	*Washer, Lock 5/16 x .125 x .078
23	124824	*Nut, Hex., 5/16-18 x 1/2 x 3/16, Stl.
24	37403	Handle, Yoke Clamp
25	37816	Washer, Flat, .630 x 1-1/8 x .093
26	30558	Screw, Lock
27	63118	Housing, Latch Pin
28	30565	Bumper
29	63307	Cover, Carriage L.H.
30	37494	Pin, Swivel Latch
31	30521	Spring, Swivel Latch
32	63119	Retainer, Spring
33	63252	Handle, Swivel Latch Pin
34	63127	Track
35	448337	Screw, Mach., No. 10-32 x 5/8, Type 23 C.I., Rd. Hd., Cad.
36	60259	Screw, Mach., 5/16-18 x 1-1/2, Hex. Washer Hd.
37	138540	*Washer, Lock, Ext. Tooth, 21/64 x 19/32 x 1/32

* Standard Hardware Item — May be Purchased Locally.

COPYRIGHTED - NOT INTENDED FOR RE-SALE

CRAFTSMAN 12-INCH RADIAL ARM SAW, MODEL No. 113.29510

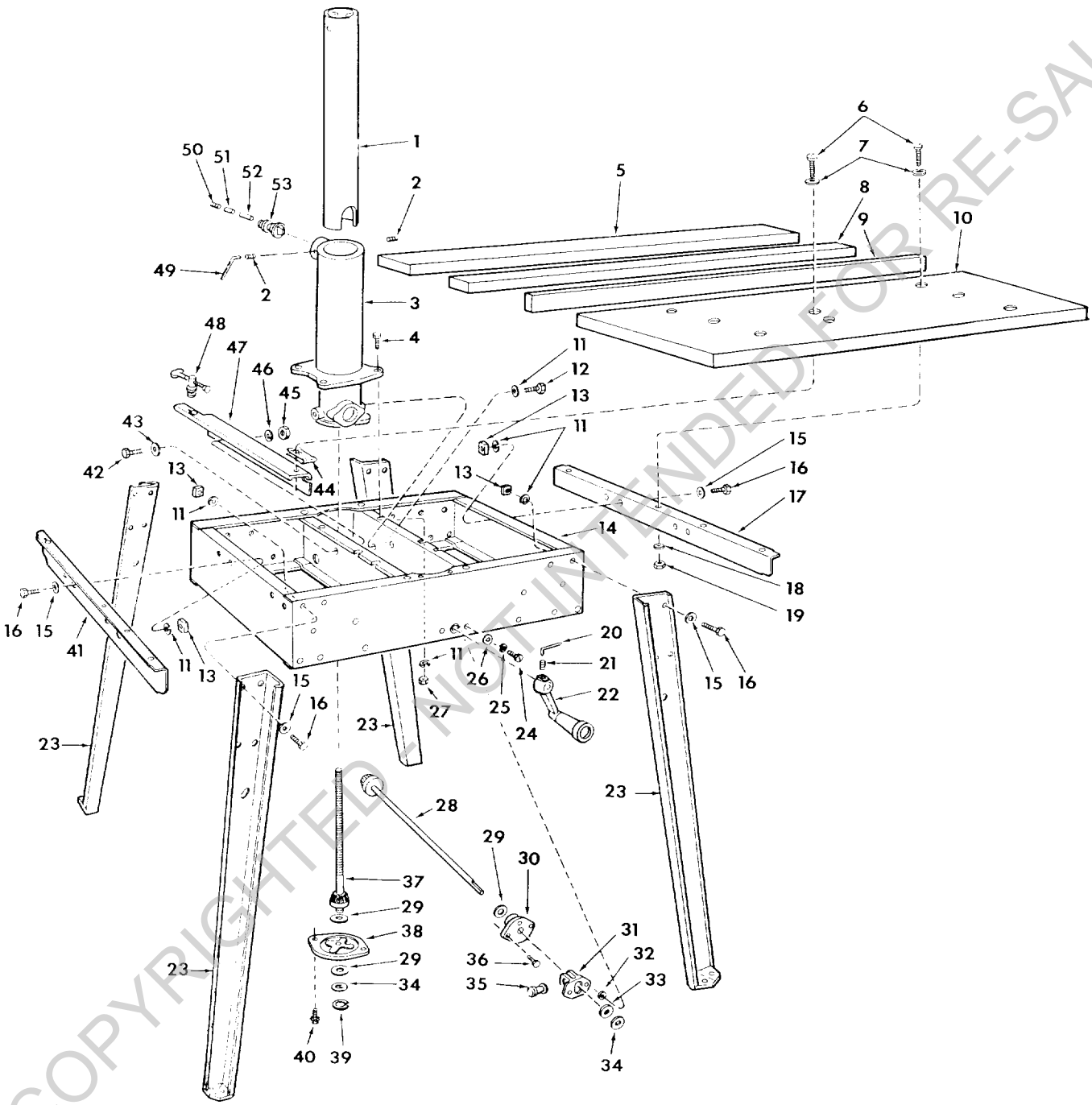

COPYRIGHTED - NOT INTENDED FOR RE-SALE

Figure 3

FIGURE 3 PARTS LIST

Key No.	Part No.	Description
1	63146	Tube Assembly, Column
2	139416	*Screw, Set, 3/8-16 x 5/8, Socket Hd., Cone Pt.
3	63293	Support, Column
4	9415839	*Screw, Mach., 3/8-16 x 1-1/8, Hex. Hd. Ind.
5	63108	Table, Rear
6	60056	*Screw, Mach., 1/4 20 x 1, Pan Hd., Slotted
7	60128	*Washer, Plain, 17/64 x 5/8 x 1/32
8	63109	Spacer, Table
9	63110	Fence, Rip
10	63107	Table, Front
11	131202	Washer, Lock, 3/8 S.A.E. Stl.
12	9415836	*Screw, Mach., 3/8-16 x 5/8, Hex. Hd., Steel
13	125525	*Nut, Square, 3/8-16 x 5/8 x 21/64
14	63292	Base
15	60087	*Washer, Plain, 13/32 x 7/8 x 1/16
16	9415838	*Screw, Mach., 3/8-16 x 1, Hex. Hd. Ind.
17	63311	Support, Table R.H.
18	115109	*Washer, Lock, 1/4 x .109 x .062
19	115120	*Nut, Hex., 1/4-20 x 7/16 x 3/16, Stl.
20	30505	*Wrench, Hex. "L", 1/8 Across Flats
21	102570	*Screw, Set, 1/4-20 x 3/8, Socket Hd., Cup Pt.
22	63254	Crank Assembly, Elevation
23	63255	Leg
24	448035	*Screw, No. 10-32 x 1/2, Pan Hd.
25	120217	*Washer, Lock, No. 10 x .062 x .047
26	60079	*Washer, 13/64 x 7/16 x 1/16, Cad. Pl. Steel
27	118615	*Nut, Hex., 3/8-16 x 9/16 x 21/64, Stl.
28	63116	Shaft Assembly, Elevating Crank
29	30509	Washer, End Play, No. 8 (As Required)
30	30510	Bracket, Elevating Shaft Bearing
31	30512	Bracket, Bearing
32	60079	Washer, Plain, .203 x 7/16 x 1/16
33	30604	Washer, Oil Sling
34	63405	Washer — Keyed
35	30511	Pin, Pivot
36	448649	Screw, Mach., 1/4-20 x 3/4, Type 23 C.I., Hex. Hd.
37	63404	†Shaft Assembly, Elevation
38	37428	Plate, Retaining
39	63331	Ring, Retaining
40	423561	*Screw, Mach., 5/16-18 x 7/8, Hex. Hd. Ind. w/L/washer
41	63310	Support, Table L.H.
42	9415813	*Screw, Mach., 5/16-18 x 3/4, Hex. Hd. Ind.
43	60013	*Washer, Plain, 11/32 x 7/8 x 1/16, Steel
44	37530	Nut, "U" Clip, 1/4-20
45	219463	*Nut, Hex., 5/16-18 x 1/2 x 21/64, Stl.
46	131201	*Washer, Lock, 5/16 x .125 x .078
47	63312	Support, #2 Table
48	37862	Clamp, Table
49	37911	*Wrench, Hex. "L", 3/16 Across Flats
50	102718	*Screw, Set, 5/16-18 x 1/2, Slotted, Cup Pt.
51	63078	Plug, Back Up (Steel)
52	63077	Plug, Friction (Nylon)
53	63079	Key, Column Tube

* Standard Hardware Item — May be Purchased Locally.
† Key No. 37 Includes Key Nos. 34 and 39.

COPYRIGHTED - NOT INTENDED FOR RE-SALE

CRAFTSMAN 12-INCH RADIAL ARM SAW, MODEL No. 113.29510

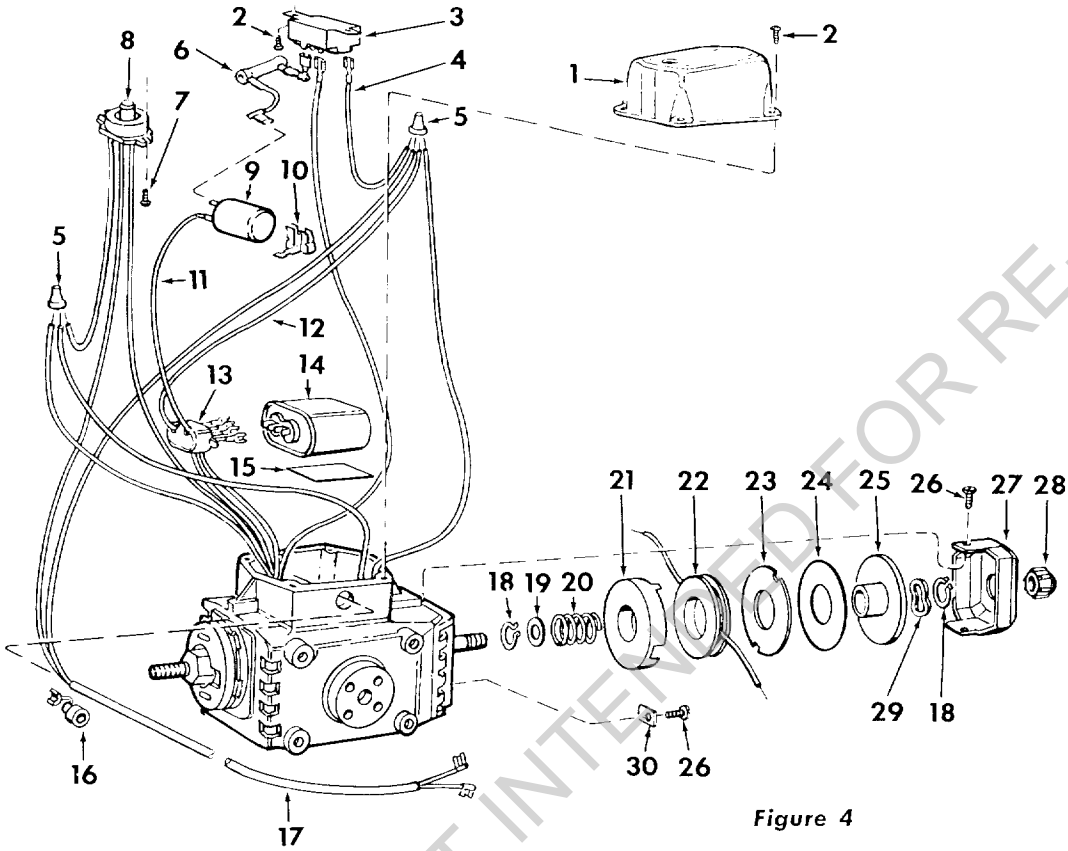

Figure 4

FIGURE 4 PARTS LIST

Key No.	Part No.	Description
—	63234	Complete Motor Assembly
1	63308	Box Assembly, Control (w/Nameplate)
2	448001	*Screw, Self-Tapping, No. 6-32 x 1/4", Pan Hd., Slotted
3	62245	Relay
4	62266	Lead Assembly, White
5	30573	*Connector, Wire
6	62360	Resistor
7	9404353	*Screw, Self-Tapping, No. 6-32 x 7/16", Pan Hd., Slotted
8	62264	Protector
9	30445	Capacitor
10	62267	Clip
11	62268	Lead Assembly, Red
12	62269	Lead Assembly, Yellow
13	62270	Cap, Capacitor
14	62271	Capacitor

Key No.	Part No.	Description
15	62272	Spacer, Condenser Cover
16	37818	Relief, Strain
17	63223	Cord Assembly
18	37158	Ring, Retaining
19	30767	Washer, Spacer (As Required)
20	37415	Spring
21	37908	Housing, Brake Coil
22	63133	Coil, Brake
23	63134	Shoe, Brake
24	63137	Lining, Brake
25	37884	Disc, Brake
26	448011	*Screw, Self-Tapping No. 8-32 x 3/8", Pan Hd., Slotted
27	63309	Cover, Brake
28	30582	Cap, Shaft
29	37886	Washer, Spring
30	37412	Cleat

* Standard Hardware Item — May be Purchased Locally.

COPYRIGHTED - NOT INTENDED FOR RE-SALE

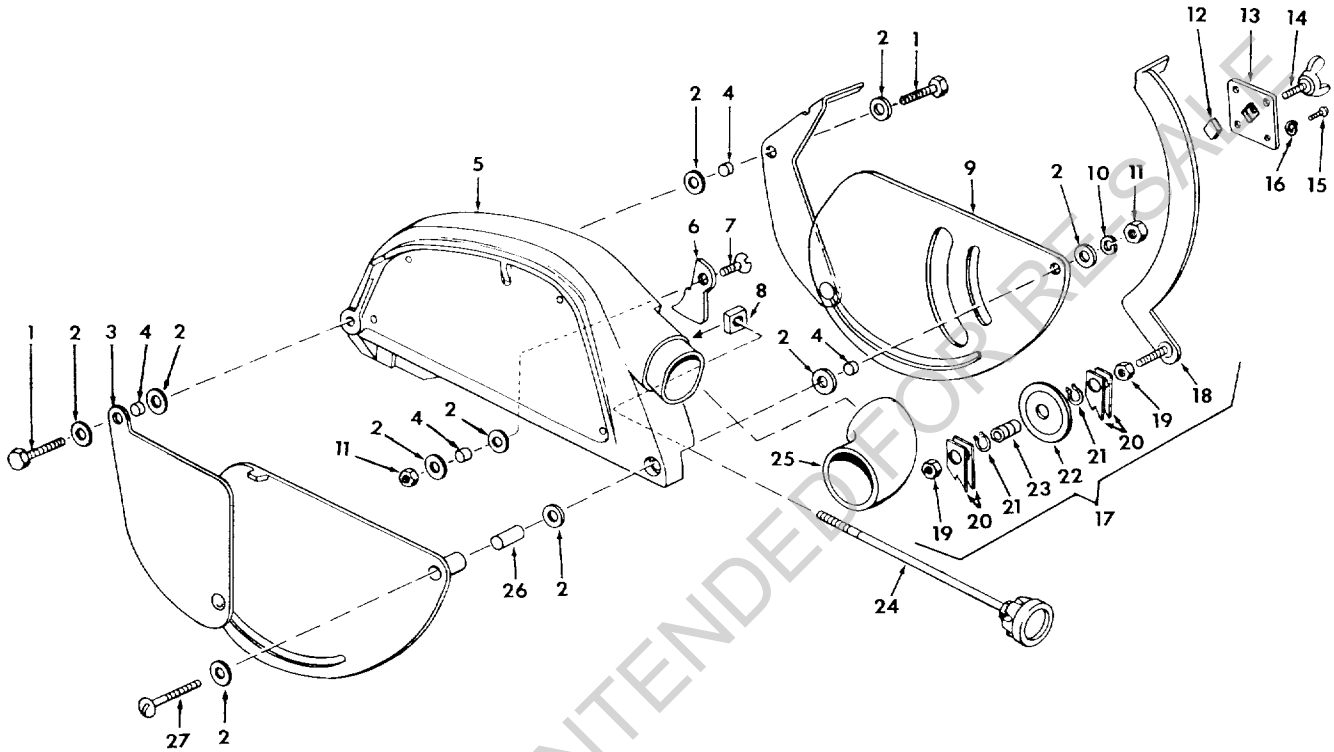

Figure 5

FIGURE 5 PARTS LIST

Key No.	Part No.	Description
—	63265	Guard Assembly (Complete)
1	448649	Screw, Hex. Hd., 1/4-20 x 3/4 Type 23
2	60218	Washer
3	63264	Guard Assembly, Lower Outer
4	63266	Bushing
5	63256	Guard Assembly
6	63257	Shoe, Clamp
7	126151	*Screw, 1/4-20 x 1-1/8, Fl. Hd., Sl.
8	120399	*Nut, Sq., 5/16-18 x 9/16 x 7/32
9	63263	Guard Assembly, Lower Inner
10	115109	*Washer, Lock, 1/4 x .109 x .062
11	9413314	*Nut, Lock
12	63262	Shoe
13	63261	Guide, Anti-Kickback

Key No.	Part No.	Description
14	60219	Screw, Wing
15	9404389	*Screw, No. 10-32 x 7/16, Type 23, Pan. Hd.
16	120217	*Lockwasher, 10 x .062 x .047
17	63260	Pawl Assembly, Anti-Kickback
18	63268	Bar, Anti-Kickback
19	124824	*Nut, Hex., 5/16-18 x 1/2 x 3/16
20	63271	Pawl, Anti-Kickback
21	60220	Ring, Retaining
22	63270	Spreader
23	63269	Bearing
24	63259	Clamp Assembly, Guard
25	63258	Elbow, Dust
26	63267	Bushing
27	60210	*Screw, Mach., 1/4-20 x 2-5/8, Pan Hd.

* Standard Hardware Item — May be Purchased Locally.

COPYRIGHTED - NOT INTENDED FOR RESALE

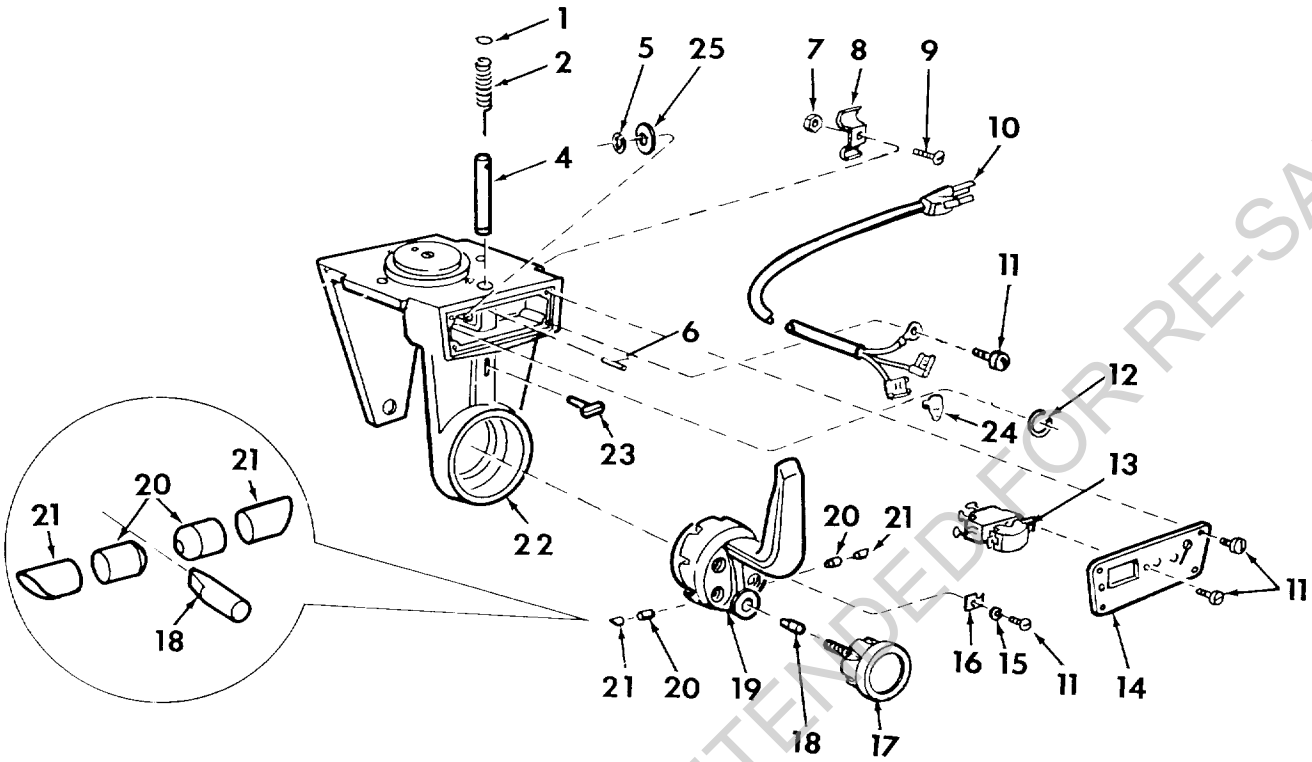

Figure 6

FIGURE 6 PARTS LIST

Key No.	Part No.	Description
1	30547	Disk
2	30548	Spring, Latch Pin
4	30689	Pin, Bevel Latch
5	30574	Ring, Hog
6	453676	Pin, Roll, 1/8 x 1
7	115999	*Nut, 10-32 x 3/8 x 1/8
8	63222	Clamp, Cord
9	455330	*Screw, Sems, No. 10-32 x 1
10	63298	Cord with Plug
11	448001	Screw, No. 6-32 x 1/4, Type 23 C.I., Pan Hd., Cad.
12	62258	Ring, Clamp

Key No.	Part No.	Description
13	62299	Switch (off-on)
14	63304	Lock Assembly, Switch
15	37935	Washer, Fibre, .140 x .250 x 1/32
16	30559	Indicator, No. 2
17	63315	Knob, Bevel Index
18	30664	Pad, Pressure
19	63297	Handle, Bevel Index
20	30663	Expander
21	30665	Shoe, Index Handle Brake
22	63296	Yoke Assembly
23	30693	Handle, Latch Pin
24	63467	Cap, Insulator
25	60055	Washer, Fibre, .380 x 3/4 x 1/16

* Standard Hardware Item — May be Purchased Locally.

COPYRIGHTED - NOT INTENDED FOR RE-SALE

NOTES

COPYRIGHTED - NOT INTENDED FOR RE-SALE

Sears

CRAFTSMAN COMMERCIAL

REG. TRADEMARK

owners manual

MODEL No.
113.29510

The Model Number will be found on a plate attached to your saw, at the left-hand side of the base. Always mention the Model Number when requesting service or repair parts for your 12-INCH RADIAL ARM SAW.

HOW TO ORDER REPAIR PARTS

All parts listed herein may be ordered through SEARS, ROEBUCK AND CO. or SIMPSONS-SEARS LIMITED. When ordering parts by mail, selling prices will be furnished on request or parts will be shipped at prevailing prices and you will be billed accordingly.

WHEN ORDERING REPAIR PARTS, ALWAYS GIVE THE FOLLOWING INFORMATION AS SHOWN IN THIS LIST.

1. The PART NUMBER
2. The PART DESCRIPTION
3. The MODEL NUMBER 113.29510
4. The NAME of ITEM — 12-INCH RADIAL ARM SAW

SEARS SERVICE IS AT YOUR SERVICE WHEREVER YOU LIVE OR MOVE IN THE U.S.A.

Your Sears merchandise takes on added value when you discover that Sears has over 2,000 Service Units throughout the country. Each is staffed by Sears-trained, professional technicians using Sears approved parts and methods.

COPYRIGHTED - NOT INTENDED FOR RE-SALE

Form No. 3621-3