Save this manual for future reference

SEARS

owner's manual

SEARS CANADA CATALOGUE NO. 09 27884
MODEL NO. 113.278641C

Serial Number_____
Model and serial numbers may be found at the rear of the base.

You should record both model and serial number in a safe place for future use.

CRAFTSMAN®

10-INCH RADIAL SAW

CAUTION:

Read GENERAL and ADDITIONAL SAFETY INSTRUCTIONS carefully

- **Assembly**
- **Operation**
- **Repair Parts**

Sold by: SEARS CANADA INC., TORONTO, ONTARIO, CANADA M5B 2B8

Part No. SP5408A Form No. SP5408A Printed in U.S.A. 11/90

FULL TWO YEAR WARRANTY ON CRAFTSMAN TOOL

If this Craftsman Tool fails to operate within two years from the date of purchase, return it to the nearest Sears Canada Inc. ("Sears") store and "Sears" will repair it, free of charge.

If this tool is used for commercial or rental purposes this warranty applies for only 90 days from the date of purchase.

This warranty is in addition to any statutory warranty.

SEARS CANADA INC., TORONTO, ONTARIO, CANADA M5B 2B8

Table of Contents

Section Title	Page Numbers
Safety Information	3-6
Putting Your Saw Together	7-10
Location and Function of Controls	11-14
Alignment of the Blade	15-31
Electrical Connections	32
Crosscutting	33-39
Ripping	40-48
Cutting Accessories	49-52
Glossary	53
Helpful Hints	54-55
Maintaining Your Saw	56-61
Trouble Shooting	62-66
Parts List	68-78
Consumer Response	79

Safety Information

The operator's manual contains safety information, instructions and signs for your protection against serious injuries, including:

Loss of fingers, hand, arm or leg from contact with the saw blade.

Eye injuries, including being blinded from being hit by a thrown workpiece, workpiece chips or pieces of the saw blade.

Impact injuries, including broken bones and internal organ damage, from being hit by a thrown workpiece, workpiece chips or pieces of the saw blade.

Shock, electrocution, or burn injuries from contact with wires, motor or other saw parts.

Safety Symbol and Signal Words

The safety information in this manual is highlighted by the following safety alert symbol.

Fig. 1 Safety Alert Symbol

The following signal words are used to indicate the level of risk.

⚠ **DANGER:** Means that if the safety information is not followed, someone **will** be seriously injured or killed.

⚠ **WARNING:** Means that if the safety information is not followed someone **could** be seriously injured or killed.

⚠ **CAUTION:** Means that if the safety information is not followed someone **may** be injured.

All of the safety information **and cutting steps** are critical to the safe operation of the radial arm saw.

Major Hazards

1. Workpiece Kickback

Kickback is an uncontrolled grabbing and throwing of the workpiece during ripping. If kickback occurs, the workpiece can hit you hard enough to cause broken bones, internal organ injury or death. To reduce or prevent kickback, read and follow the safety information in the Ripping section of the manual.

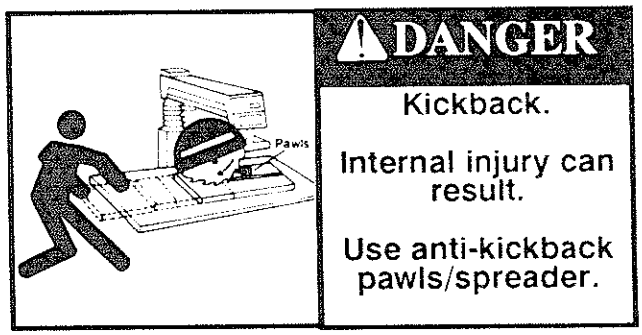

Fig. 2 Kickback Safety Sign

2. Kickback Followed by Blade Contact

Kickback followed by blade contact can happen when the saw blade is pinched or bound by the workpiece during ripping. Kickback can happen if you reach around the blade to the end **with** the anti-kickback pawls, (out-feed end), and try to hold-down or pull the workpiece through to complete the cut. Your fingers, hand, or arm can be cut off by the blade if the workpiece kicks back.

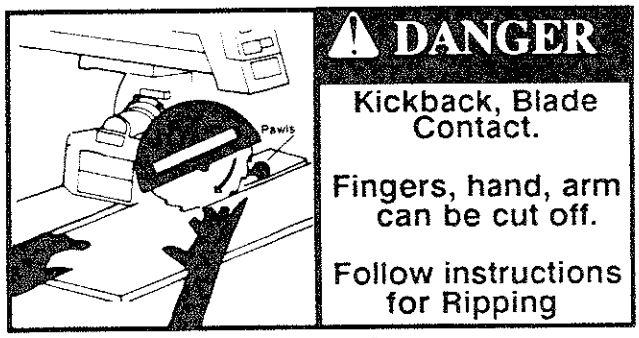

Fig. 3 Blade Contact Safety Sign

3. Wrong Way Feed

Wrong way feed is feeding the workpiece into the end of the saw **with** the anti-kickback pawls. The workpiece can be grabbed by the blade and pull your hands into the blade before you can let go or pull back. Fingers, hand or arm can be cut off.

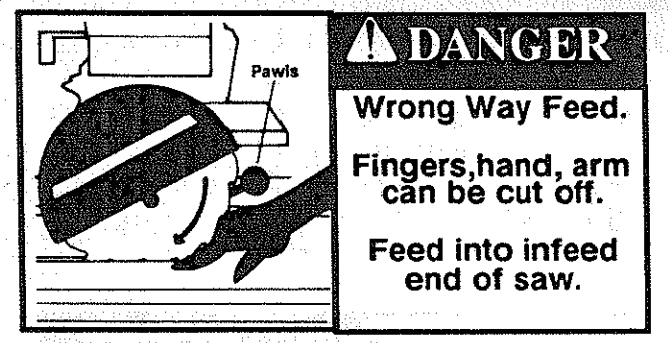

Fig. 4 Wrong Way Feed Safety Sign

If a workpiece is fed into the end of the saw **with** the anti-kickback pawls, it can take off like a missile. Anyone hit by the workpiece can be killed. Feed the workpiece into the in-feed end of the saw blade, the end that does **not** have the anti-kickback pawls.

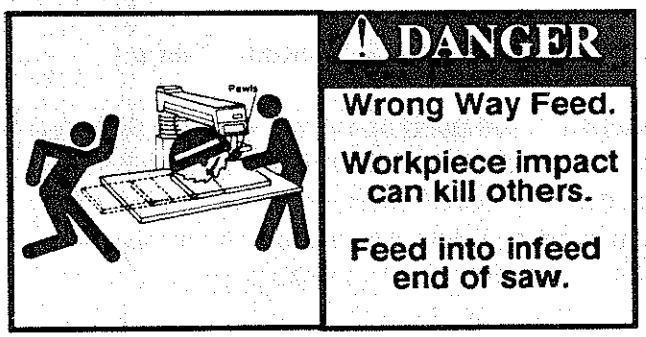

Fig. 5 Wrong Way Feed Safety Sign

4. Thrown Workpiece Chips and Blade Pieces

The saw can throw the workpiece, workpiece chips or pieces of the blade violenty. You can be blinded. Wear safety goggles labeled "CSA Z94.3—1969" on the package.

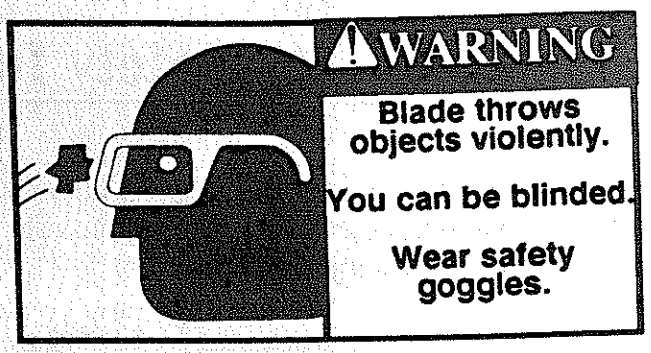

Fig. 6 Safety Goggles Safety Sign

DANGER: Follow the 8 steps listed below to reduce or eliminate the risk of being injured when using the radial arm saw. Failure to do so can result in a life threatening injury or death.

DANGER

1. **Lower** the anti-kickback pawls and spreader when crosscutting and ripping.

2. Set blade guard in **horizontal** position when crosscutting.

3. **Lower** blade guard nose **only** when ripping.

4. Keep hands as far away from the blade as possible when cutting.

5. Return the saw to its rearmost position after each crosscut.

6. Wait until the blade has stopped turning before reaching for the workpiece or **anything** else on the table.

7. Read and follow the safety information and safety instructions in the operator's manual and in the safety labels on the radial arm saw.

8. Know location and function of all controls before using saw. See the Location and Function of Controls section.

Personal Safety

1. Wear safety goggles labeled "CSA Z94.3–1969 on the package. Do not wear regular glasses, they are not safety glasses.

2. Wear snug fitting clothes, short sleeve shirts and nonslip footwear. Cover up or tie long hair. Do not wear loose, baggy clothes, gloves, neckties, rings, watches or any other jewelry.

3. Wear a dust mask, with your safety goggles, if cutting operation is dusty.

4. Wear hearing protectors, ear plugs or muffs, if you use the saw daily.

5. Keep good footing and balance. Don't overreach.

Work Area Safety

1. Keep children, pets and visitors out of the work area.

2. Make the work area child proof. Remove the yellow key from the red switch and place it out of reach and sight. Lock work area.

3. Keep floors dry and free from sawdust, wax or other slippery materials.

4. Keep work area clean, uncluttered and well lighted.

5. Use the saw in a dry area. Do not use in wet or damp area. Do not use outside.

6. Clear the table of all objects (adjusting wrenches, tools, scraps of wood etc.) except the workpiece to be cut, fixtures or clamps before turning the saw on.

7. Do not do layout, assembly or setup work on the table while the blade is turning.

8. Store items away from the saw. Do not climb on the saw to reach items. Do not stand on the table; the saw can tip over.

Saw Safety

1. Keep guards and anti-kickback pawls in place and in working order.

2. Check for broken or damaged parts before using saw. A damaged guard or other saw part should be checked for alignment, binding, breakage and correct mounting to make sure they are working properly. Repair or replace damaged guards or other saw parts.

3. Unplug saw before doing maintenance, making adjustments, and changing blades and accessories.

4. Use clamps or vice to hold workpiece when practical. It's safer than using your hands and frees them to operate the saw.

5. Do not force the saw, saw blade or accessories to do jobs they are not designed to do.

6. Make sure the yellow key is removed and the red switch is in the off position before plugging in the power cord.

7. Cut only wood, woodlike or plastic materials. Do not cut metal materials.

8. Secure the saw to floor, wall, bench or table if it slides, tips or walks during use.

9. Feed the workpiece against the direction of rotation of the blade when ripping.

10. Turn the saw off before leaving work area. Do not leave the saw until the blade has stopped.

11. Lock the rip and miter locks before moving the saw from one location to another.

12. Turn the saw off and remove yellow key if the blade jams. Do not try to free a jammed workpiece with the saw on.

13. Turn the saw off if it vibrates excessively or makes an unfamiliar noise. Correct any problems before restarting saw.

14. Rip workpieces that are longer than the diameter of the blade being used. Do not rip a workpiece that is shorter than the diameter of the blade being used.

15. Cut only one workpiece at a time. Do not cut stacked workpieces or lay them edge to edge for cutting.

Workpiece Support Safety

1. Use additional supports for workpieces which extend beyond the saw table. Large workpieces can shift, twist, rise from table or fall after they are cut.

2. Helpers can be hit by a thrown workpiece, workpiece chips or pieces of the blade. Use table extensions or other supports. Do not use helpers. Helpers can cause the workpiece to kickback. Do not use other people to support or assist in feeding or pulling the workpiece. Use table extensions.

3. When table extensions over 24 inches wide are added to either side of the saw, make sure you either bolt the saw to the floor or support the outer end of the extension from the floor with sturdy legs or an outrigger.

Blade Safety

1. Use blades marked for 3450 rpm or higher.
2. Do not use blades larger than 10 inches in diameter.
3. Keep blade sharp and clean.
4. Do not cycle motor switch on and off rapidly; the blade can loosen.
5. Do not overtighten the blade; the blade collar can be warped.

Read the following danger labels which appear on the front of the radial arm saw base assembly, motor and saw guard:

1. Wrong way feed label located on the outfeed end of the blade guard.

Fig. 7 Wrong Way Feed Label

2. Safety instruction label located on the bottom of the motor.

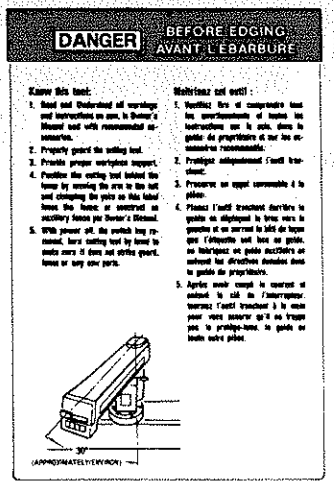

3. Ripping safety label located on the back of the motor.

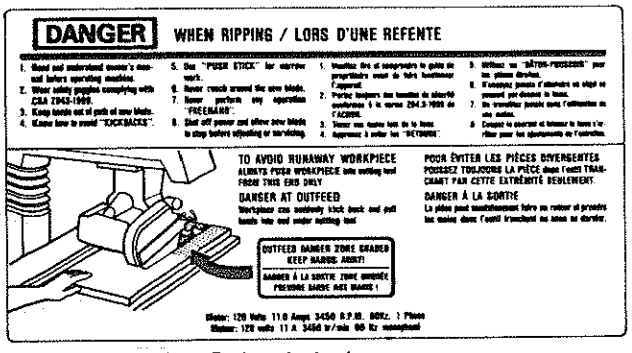

Fig. 9 Ripping Safety Label

4. Safety instruction label located on the front of the saw near the handwheel.

DANGER

FOR YOUR OWN SAFETY:

1. Read and understand owner's manual before operating machine.
2. Wear safety goggles complying with CSA Z94.3-1969.
3. Keep hands out of path of saw blade.
4. Never reach around the saw blade.
5. Never perform any operation "FREEHAND."
6. Return carriage to the full rear position after each cross-cut type operation.
7. Shut off power and allow saw blade to stop before adjusting or servicing.

Fig. 9B Safety Instruction Label

Putting Your Saw Together

Your radial arm saw is easy to put together, however it will take time. Ask a friend to help, and follow these assembly instructions. It is important for your safety, and for the quality of your cuts, that the saw be put together with care.

⚠ WARNING: Plugging the saw in during assembly can result in electrical shock or your fingers, hand, or arm being cut off from blade contact. Do not plug in the saw at any time during assembly. The saw should only be plugged in when it is to be used.

Unpacking/Set up

1. As you unpack, try to keep the contents of each of the smaller bags together and separate from the others. This will help you identify and locate the parts you need during assembly.

The following parts are included with model 113.278641C:

A	Basic Saw Assembly	1
B	Operator's Manual	1
C	Channel, Table Mounting	2
D	Trim Caps	2
E	Channel, Leg	1
F	Leg	4
G	Stiffener, Lower	4
H	Rear Table	1
J	Spacer	1
K	Fence	1
L	Front Table	1
M	Loose Parts Bag*	4

* This is the total number of loose parts bags.

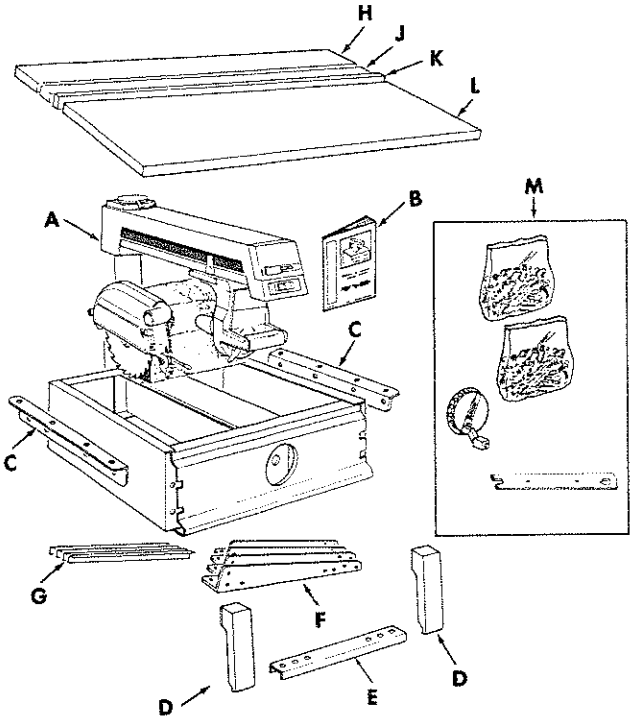

Fig. 10 - Parts for Model 113.278641C

2. Identify the large parts of your saw before beginning each section. Your task will be easier if you are familiar with these parts.

3. Identify the tools required for assembly. Make sure that you have all of the tools you will need. (Figure 11)

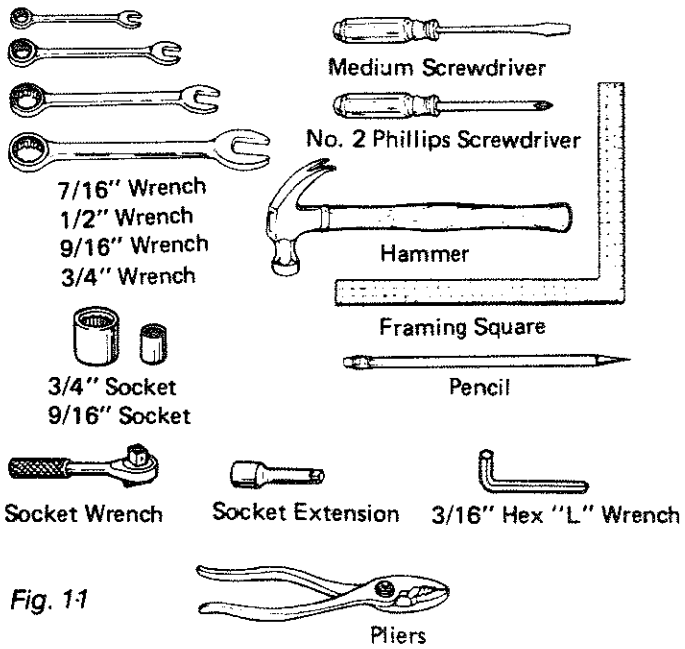

Fig. 11

Q Bag of Loose Parts
Containing the following items:

A Indicator Rip 2
B Indicator Bevel 1
C Sleeve 1
D Screw, Pan Hd. 10-32 x 1/2 1
F Lockwasher, Ext. #10 1
G Switch Key 1

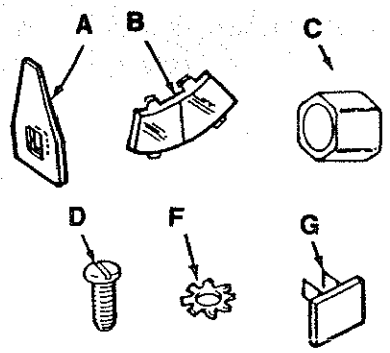

R Bag of Loose Parts
Containing the following items:

A Thumbscrews 2
B Square Nuts 2
C Cup Washer 2
D Clamp Bracket 2

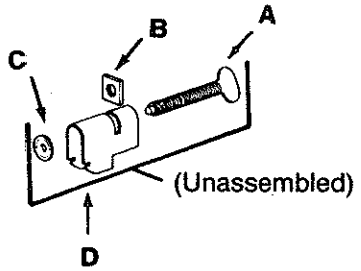

Bag of Loose Parts
Containing the following items:

A Screw, Hex Hd. 5/16-18 x 3/4 4
B Washer 11/32 x 7/8 x 1/16 4
C Lockwasher 5/16 x 7/8 x 1/16 4
D Nut, Hex 5/16-18 4
E Screw, Pan Hd. 1/4-20 x 1 4
F Washer, 17/64 x 5/8 x 1/32 5
G Lockwasher 1/4 4
I Cup Point Set Screw 1/4-20 x 7/8 1
J Tee Nut 1
K "U" Clip 1/4-20 1
L Screw, Pan Hd. Ty "T" 1/4-20 x 1-3/4 1

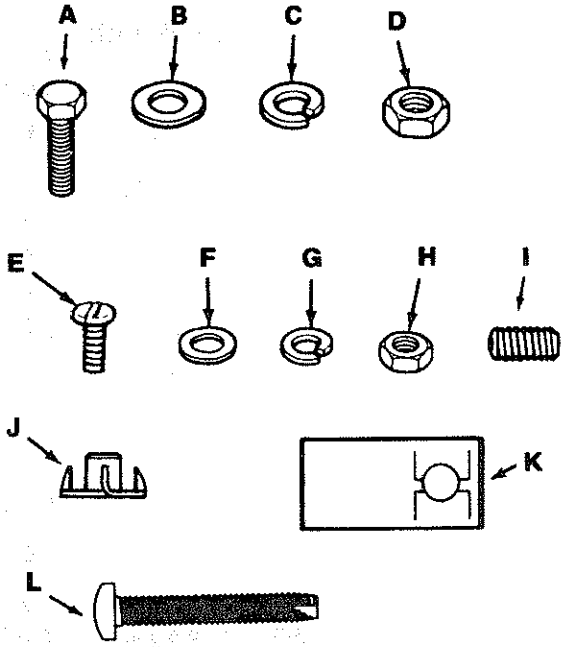

Information

1. If you are missing any part while putting your saw together, do not continue assembly. Contact your Sears Service Center or Retail Store and get the missing part before continuing assembly or trying to use the saw.
Complete parts listed are located at the end of this manual. Use these lists to identify the number of any missing part.
2. Sometimes small parts get lost in packaging materials. Do not throw away any packaging until your saw is put together. If you are missing a part, check the packaging before contacting Sears.
3. Most parts of your radial arm saw will be fastened together using truss head bolts, lockwashers, and hex nuts of the sizes shown. (Figure 13) When different sizes are needed, the instructions will include a sketch to help you locate the correct size.

Fig. 13 - Truss Head Bolt, Lockwasher, Hex Nut

4. As you assemble your radial arm saw, some of the holes in the parts will line up and others will not. This happens because some parts are used in other equipment or for other purposes. Follow the instructions carefully. The figures will show which holes should line up in each step.

Attaching Handwheel

1. Locate the *handwheel, hex bushing, screw,* and *lockwasher.*
2. Place the *hex bushing* inside the *handwheel.*
3. The *hex bushing* has a small flat area on it which matches a flat area on the elevation shaft.
4. Align the two above flat areas and attach the *handwheel* using a *screw* and *lockwasher.*

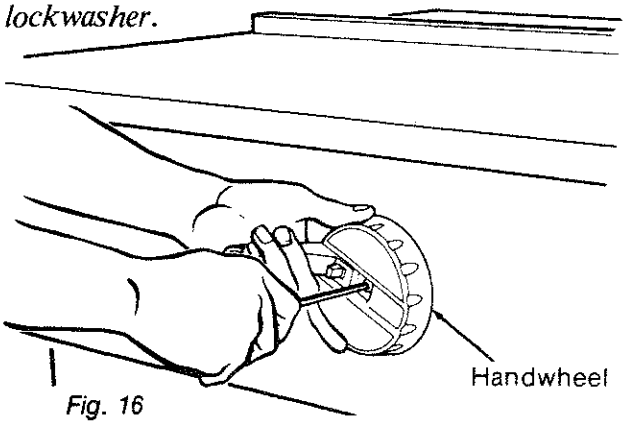

Fig. 16

Fig. 17 - Screw, Exernal Lockwasher and Hex Bushing

Mounting the Motor

⚠ WARNING: Plugging the saw in during assembly can result in electrical shock or your fingers, hand, or arm being cut off from blade contact. Do not plug in the saw at any time during assembly. The saw should only be plugged in when it is to be used.

1. Loosen the *guard clamp screw* and remove the *guard* from the *motor.*

2. Use the *arbor wrenches* to remove the *blade* from the *saw.* The *arbor shaft* has left-handed threads, so you will have to turn the nut clockwise to loosen.

3. Lock the *rip lock.*

4. Raise the *radial arm* about 2 inches and remove the styrofoam packing blocks.

5. Clean the small pieces of styrofoam off the saw.

6. Place the *motor* on the center channel of the *saw* .

7. Remove the lock nut and flat washer from the *motor pivot support.* (Figure 18)

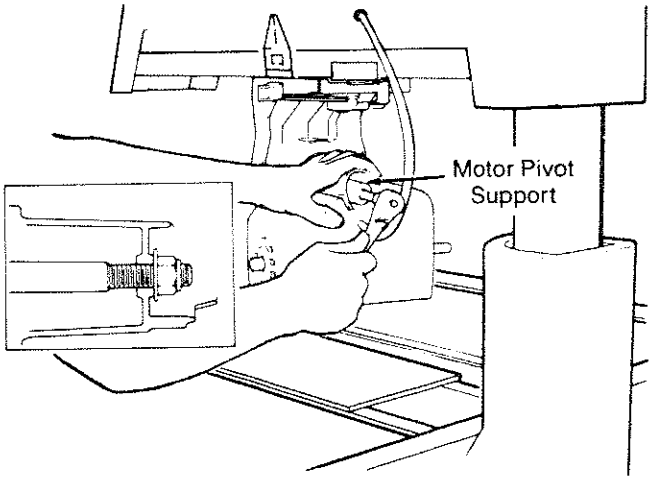

Fig. 18

8. Slide the *motor* onto the *motor pivot support*. Make sure the *motor* is firmly in place.

9. Put the flat washer and locknut back in place. Using a 3/4 inch socket wrench move the *bevel lock* back and forth as you tighten the locknut. Do not overtighten.

10. Push the *bevel lock* to the left as far as it will go. (Figure 19)

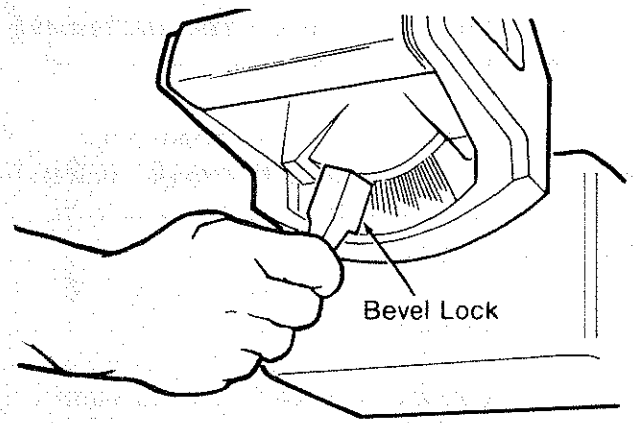

Fig. 19

11. **If** there is a 1/16 inch gap or less between the *bevel lock* and the left side of the *yoke* (and they are not touching), go to step 13, **or**

If the bevel lock touches the left side of the *yoke*, unlock the *bevel lock* and tighten the locknut on the *motor pivot support*. Then go to step 9 and repeat, **or**

If there is more than 1/16 inch gap between the *bevel lock* and the left side of the *yoke*, unlock the *bevel lock* and loosen the locknut on the *motor pivot support*. Then go to step 9 and repeat.

12. Repeat steps 9-10 until the *bevel lock* will not touch the left side of the *yoke*, and the gap is not more than 1/16 inch.

13. Lock the *bevel lock*.

Attaching the Leg Set

1. Mount *floor leveler support brackets* inside legs. Line up the three tabs on *brackets* with slot on *leg* and tap into place. Make sure lip on *bracket* points up. (Figure 20)

Install the remaining three *brackets* the same way.

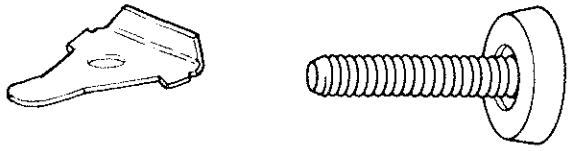

Fig. 20 - Support Bracket, Leveling Foot

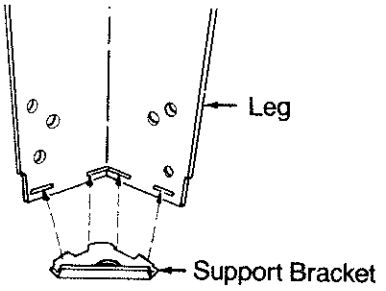

Fig. 20A

2. Put a *hex nut* on each of the *leveling feet*. Put the *leveling feet* through the holes in the bottom of the *floor leveler support bracket*.

3. Put another *hex nut* on each of the *leveling feet* and hand-tighten until they are against the *leg*.

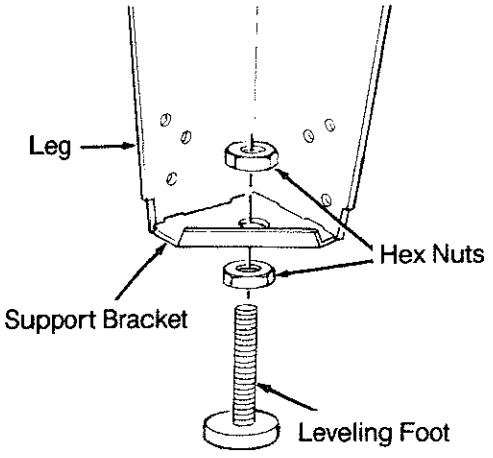

Fig. 21

Building the LEG SET

The following parts are used in the leg set assembly:

A Legs 4
B Lower Stiffeners 4

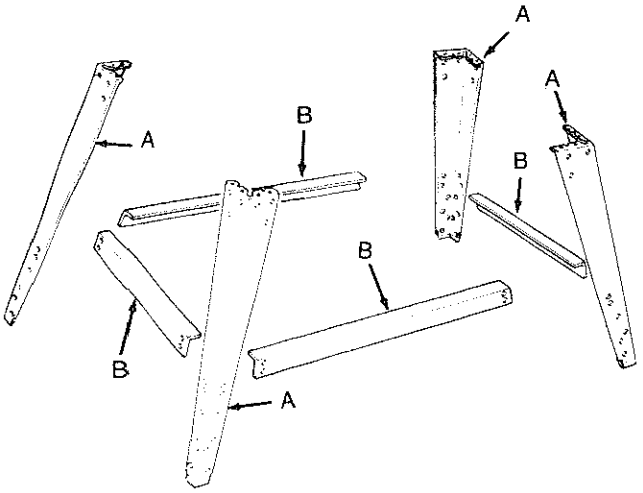

Fig. 22 - Leg Set

1. Lay a piece of cardboard on the floor to keep from scratching the *saw.*

2. Position the *basic saw assembly* on the floor as shown below. The *arm assembly* should be pointing up in a vertical position and the *column support* cover should be resting flat on the floor. It may be necessary to have someone help you lift the *saw.*

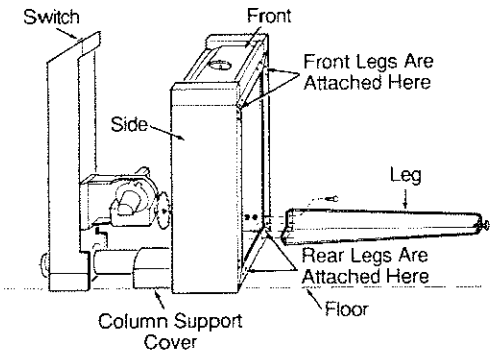

Fig. 23

3. Use *truss head bolts, lockwashers,* and *nuts* (see Fig. 23) to mount the two *rear legs* to the *basic saw assembly.* Make sure that the four holes in each corner of the *saw* line up with four holes in the top of each *leg.* Finger tighten nuts at this time.

4. Mount the two *front legs* to the basic saw assembly using *truss head bolts, lockwashers,* and *nuts.* However only put bolts through the *sides* of the *saw assembly* **not** the front.

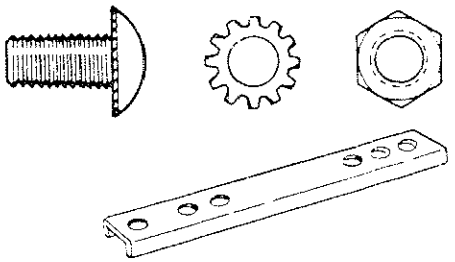

Fig. 23A - Bolt, External Lockwasher, Hex Nut, U-Channel

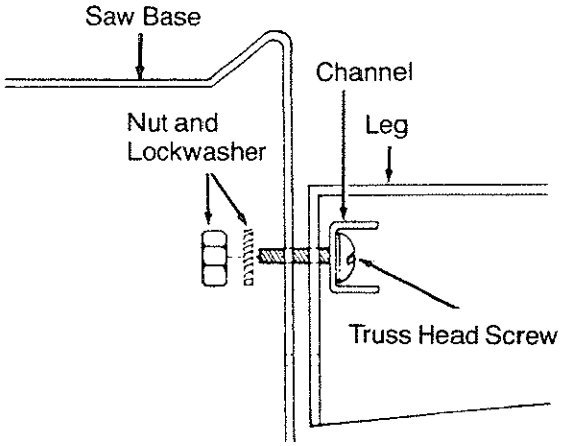

Fig. 23B

5. Position the front *channel piece* inside the *legset.* (Figure 23B) Fasten the *channel piece, leg,* and *saw* together with two *truss head bolts* on each side. Put a *lockwasher* and *hex nut* on each bolt. The threaded section of the bolt should point towards the *arm assembly.*

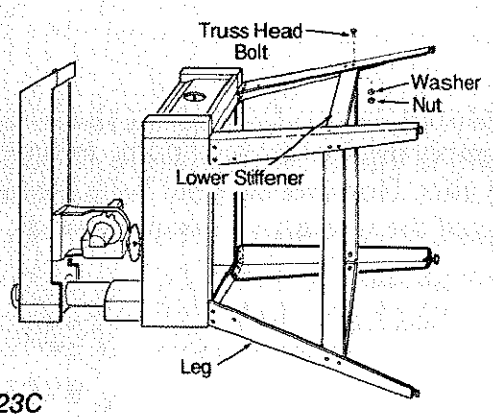

Fig. 23C

6. Attach the four (4) *lower stiffeners* to the *legs*. Two (2) *truss head bolts, washers,* and *nuts* are required to hold each end of a *lower stiffener* in place. Hand tighten *hex nuts.*

7. Go back with a 7/16 wrench or socket and tighten all hex nuts.

8. Carefully lift the saw into its normal position. It will be necessary to have someone help you in order to avoid damaging the saw.

Adjusting Leveling Feet

⚠ WARNING: Saw blade can roll forward toward you if the leveling feet are not correctly adjusted. Workpiece or saw can move unexpectedly if cabinet rocks. Fingers, hand, or arm can be cut off from blade contact. Adjust leveling feet before using your saw.

1. **If** the *leveling feet* raise the front of the *saw* slightly higher than the rear, **and** if the *leg set* does not rock, go to step 13, **or**

If the *leveling feet* do not raise the front of the *saw* slightly higher than the rear, go to step 8, **or**

If the *leg set* rocks, go to step 8.

2. Loosen the bottom hex nut on the desired *leveling foot* using a 9/16 inch wrench.

3. Loosen the top nut by hand.

4. Adjust the lower nut with the 9/16 inch wrench until the *leveling foot* is at the desired height.

5. Tighten the top nut by hand.

6. Repeat steps 8-11 for the other three *leveling feet* if necessary.

7. Tighten all four bottom nuts using a 9/16 inch wrench.

Attaching Trim Caps

1. Find the left and right *trim caps.*

2. There are two plastic stubs on the back of each *trim cap.*

3. These stubs will snap into matching holes at the front corners of the *saw.*

4. Snap the left and right *trim caps* into place.

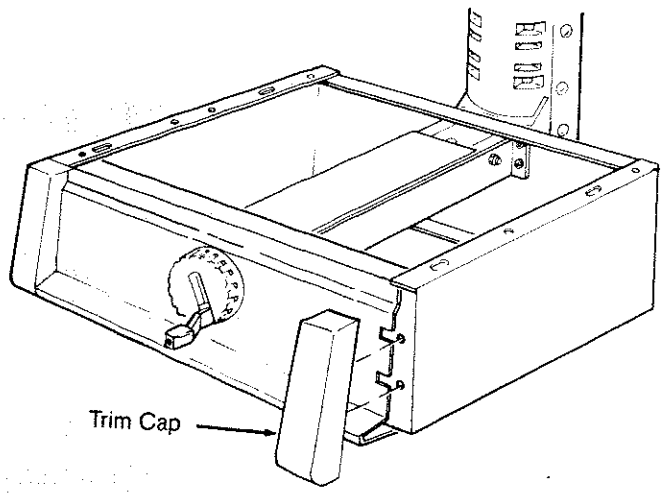

Location and Function of Controls

Stand shown is an optional accessory sold separately

Fig. 24 - Radial Saw Controls

On/Off Switch

The on/off switch turns the power to the saw on and off.

To turn the saw on, put the *yellow key* into the *red switch* and then pull the *switch* to the right. To turn the saw off, push the *red switch* to the left. Remove the *yellow key* from the *red switch* whenever the saw is turned off, and keep it out of the reach and sight of children. (Figure 25)

Fig. 25 - On/Off Switch

⚠ WARNING: The saw can start accidentally or be used by children and others when the yellow key is left in the red switch. Always remove the yellow key when the saw is off, and keep it out of the reach and sight of children.

⚠ WARNING: The saw will start immediately when the power comes back on after a blackout if the red switch is left on. Always turn the switch off and remove the yellow key when the power goes off for any reason.

Miter Lock

The miter lock is used to hold the radial arm at various angles to the fence.

To unlock the *miter lock*, pull the lock to the right. (Figure 26)

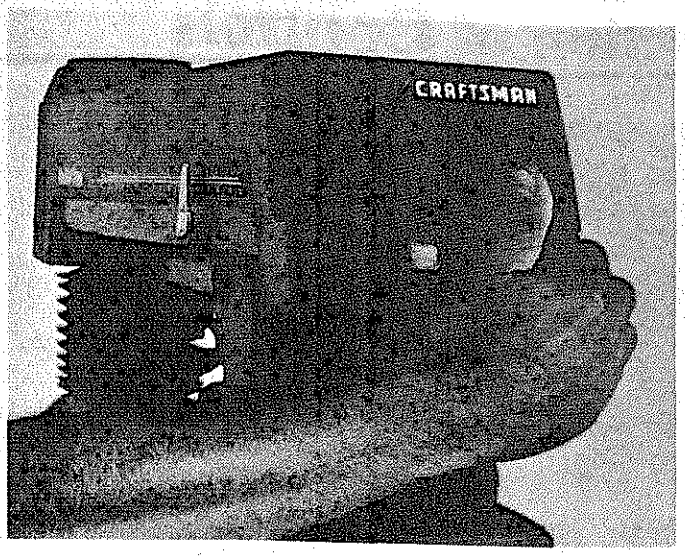

Fig. 26 - Miter Lock - Unlocked

To lock the *miter lock,* push the lock to the left. (Figure 27)

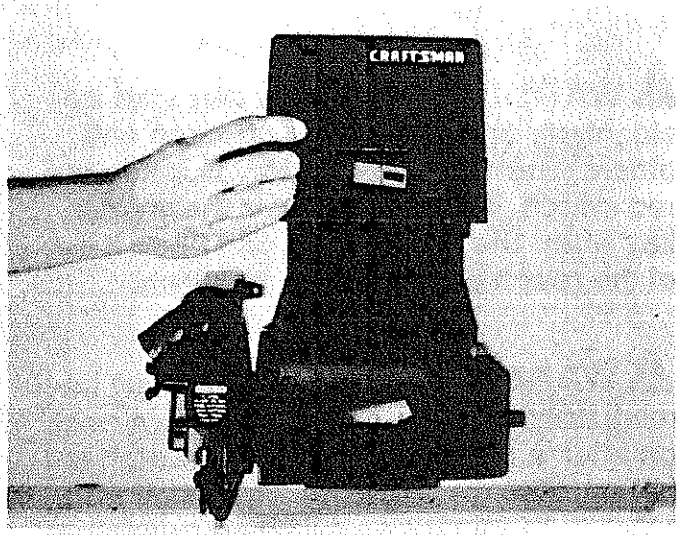

Fig. 27 - Miter Lock - Locked

There are three pre-set miter angles at 45°, 0°, and -45°. You will feel the radial arm snap into position at these miter angles. To unlock the arm when it is in one of these positions, pull the *miter lock* all the way to the right and move the *arm* as you hold the *lock* in this position.

Bevel Lock

The bevel lock is used to hold the blade at various angles to the table. To unlock the *bevel lock*, move the lock to the right. Always hold the *motor* when you unlock the *bevel lock*. (Figure 28)

⚠ CAUTION: The motor is heavy and can swing down quickly. You can be cut or injured by the arbor shaft or blade. Hold the motor when you unlock the bevel lock.

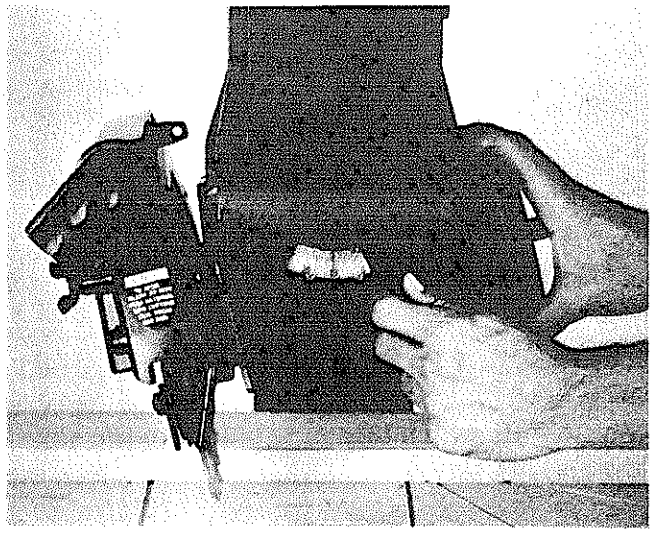

Fig. 28 - Bevel Lock - Unlocked

To lock the *bevel lock*, move the lock to the left. (Figure 29)

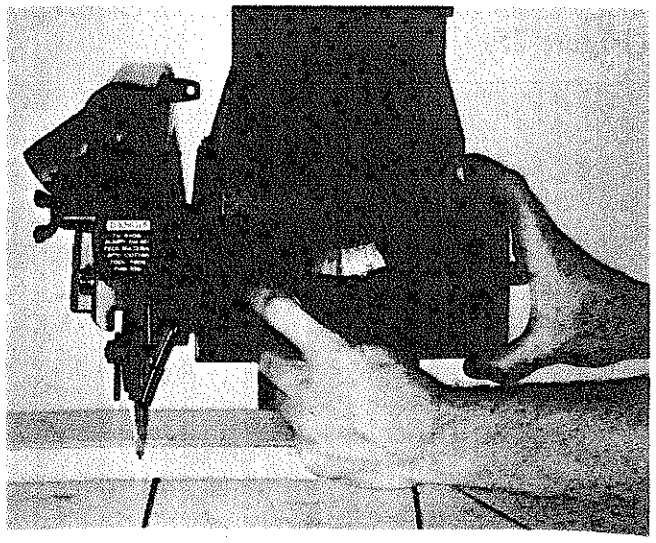

Fig. 29 - Bevel Lock - Locked

There are five pre-set bevel angles at -90°, -45°, 0°, 45°, and 90°. To unlock the *bevel lock* when the blade is at one of these angles, move the *bevel lock* all the way to the right and turn the *motor* while holding the *lock* in this position.

Swivel Lock

The swivel lock is used to hold the blade in the crosscut, in-rip, or out-rip positions, and to position the blade for molding or edging. To unlock the *swivel lock*, stand facing the *saw handle* and pull the *swivel lock* toward you. (Figure 30)

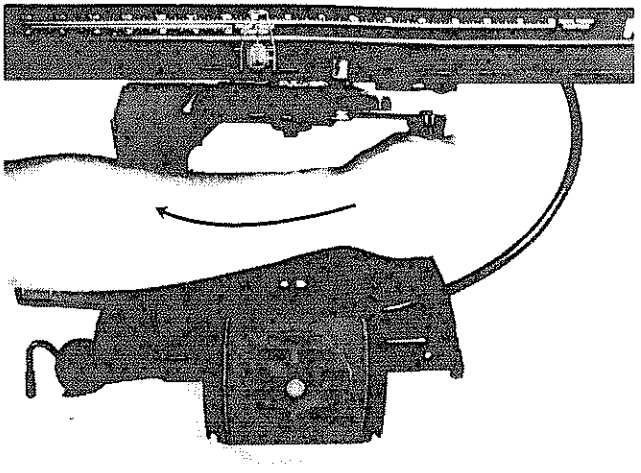

Fig. 30 - Swivel Lock - Unlocked

To lock the *swivel lock*, stand facing the *saw handle* and push the *swivel lock* away from you. (Figure 31)

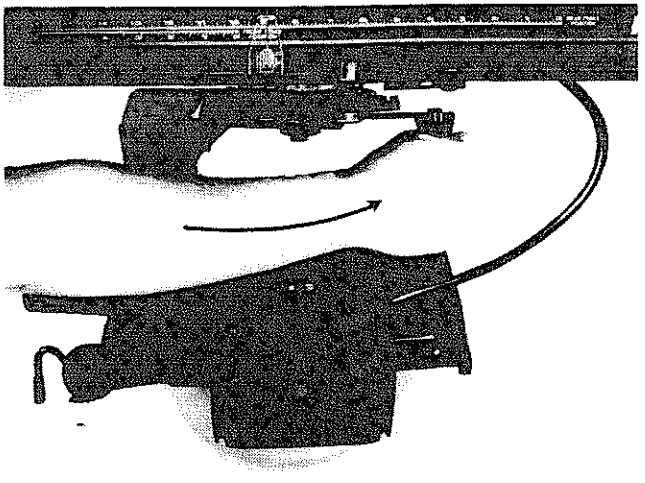

Fig. 31 - Swivel Lock - Locked

The crosscut, in-rip, and out-rip positions of the blade are pre-set positions. To unlock the *swivel lock* when the *motor* is in one of these positions, stand facing the *saw handle*, pull the *swivel lock* all the way toward you, and turn the *motor* as you hold the *lock* in this position.

Rip Lock

The rip lock is used to hold the motor and blade at a fixed position along the radial arm. It is used during ripping to hold the blade a desired distance from the fence while the workpiece is fed through. It is used before and after each crosscut to keep the blade from moving forward on its own.

To unlock the *rip lock*, pull the handle toward the front of the *arm*. (Figure 32)

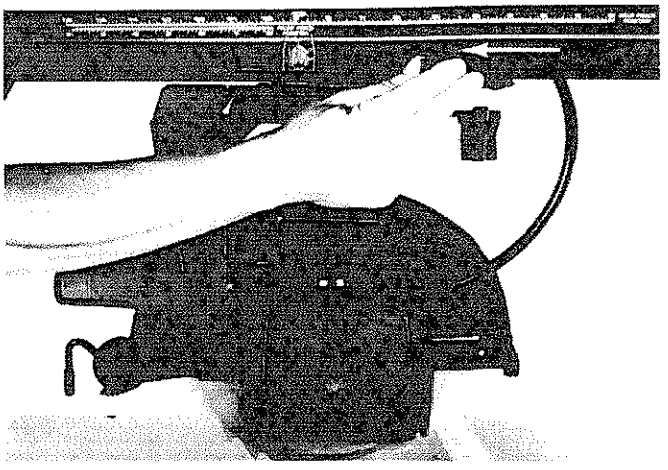

Fig. 32 - Rip Lock - Unlocked

To lock the *rip lock*, push the handle toward the rear of the *arm*. (Figure 33)

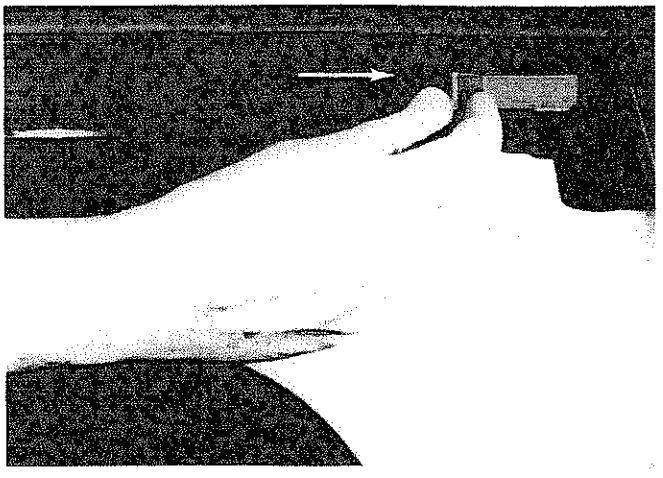

Fig. 33 - Rip Lock - Locked

Handwheel

The handwheel controls the height of the radial arm.

To raise the *radial arm*, turn the *handwheel* clockwise. To lower the *radial arm*, turn the *handwheel* counterclockwise. (Figure 34)

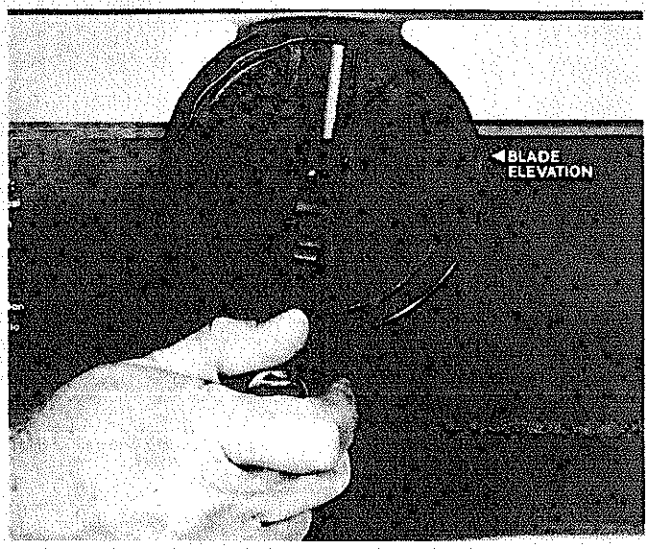

Fig. 34 - Handwheel

One complete turn of the handwheel moves the arm 1/16 inch.

The handle can be folded in by squeezing the red plastic "ears" with your thumb and index finger while pushing the handle in.

All Controls

Always lock the miter, swivel and bevel locks before making a cut on your radial arm saw. When ripping, the rip lock must also be locked. When crosscutting, the rip lock should be locked before and after each cut, when the saw is in the rearmost position.

Alignment of the Blade

ALIGNMENT OF THE BLADE IS THE *MOST IMPORTANT* STEP IN ASSEMBLING YOUR RADIAL ARM SAW.

The blade of your radial arm saw must be aligned properly for two reasons: to make cuts accurate, and to prevent binding of the blade and workpiece which can cause jams or thrown workpieces.

These adjustments must be done **in order,** before using your saw for the first time. If they are not done in order the saw will not cut accurately. If you miss an adjustment, you must go back to the adjustment you missed and repeat **all** steps from that point on.

These adjustments are like fine tuning a piece of equipment. Often a series of steps must be repeated more than once in order to get the adjustment just right.

⚠ WARNING: Plugging the saw in during alignment can result in electrical shock or your fingers, hand, or arm being cut off from blade contact. Do not plug in the saw at any time during alignment. The saw should only be plugged in when it is to be used.

Make sure that the blade and blade guard are removed from the arbor shaft before beginning to align your saw. Do not install the blade or blade guard until you are instructed to do so.

Adjusting Elevation

The goal of this adjustment is to make upward and downward movement of the radial arm smooth and firm. If the column that supports the arm is too tight it will be difficult to move the arm up and down and to get accurate depth of cut. If the column is loose the blade may "walk" on the workpiece and stall the motor, or cause a heel in bevel and compound cuts.

1. Use a *3/16" hex "L" wrench* to loosen the four screws in the front of the *column support.* (Figure 35)

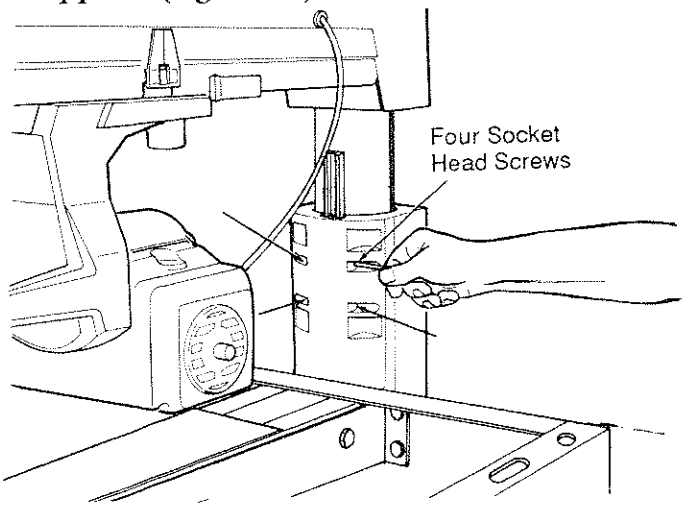

Fig. 35

2. Raise and lower the *radial arm* by turning the *handwheel* a few turns in each direction. It should take about the same amount of effort to lower the *arm* as to raise it.

3. **If** movement seems smooth and the *column* does not rock back and forth, go to the next section, **or**

If movement seems difficult, loosen the four bolts in the back of the *column* slightly (Figure 36) and go back to step 2, **or**

If *column* rocks back and forth, tighten the four bolts in the back of the *column* slightly (Figure 36) and go back to step 2.

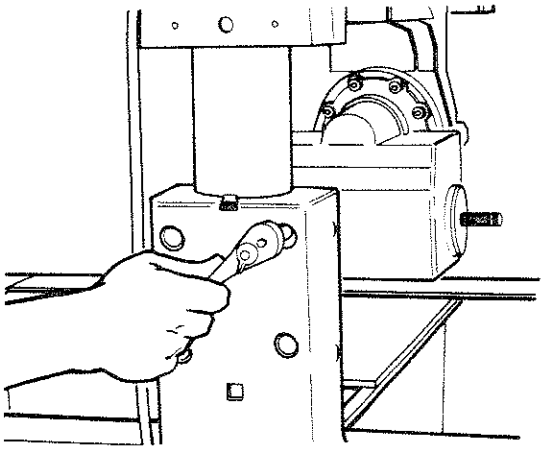

Fig. 36

Leveling Table Supports

1. Raise the *radial arm* until the bottom of the *motor* is about 2-1/2 inches above the *saw*.

2. Locate four hex head bolts and put a flat washer on each. (Figure 37A)

3. Attach a *table support* to each side of the *saw* using the four hex head bolts and flat washers. (Figure 37) Put the bolts through the center of the enlarged holes in the *table supports* so that the *supports* may slide up or down as needed.

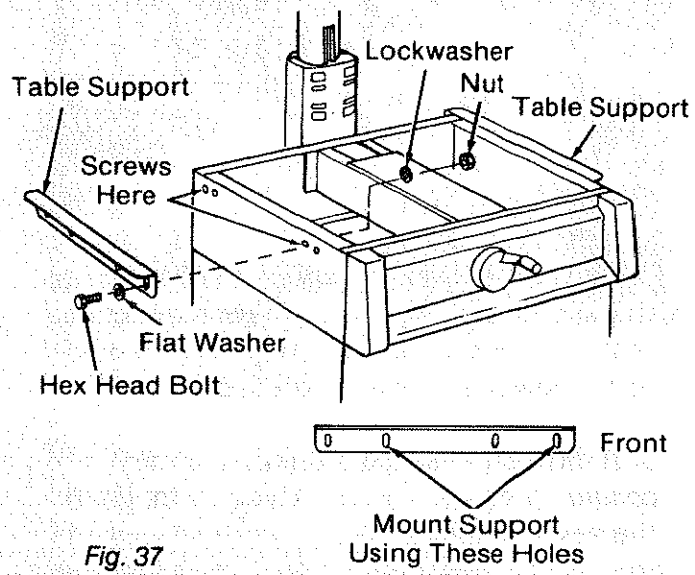

Fig. 37

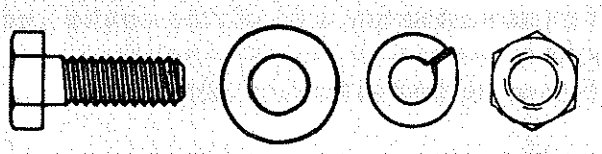

Fig. 37A

4. Put a lockwasher and hex nut on each bolt and hand-tighten.

5. Unlock the *bevel lock* to release the motor. Hold onto the *motor* as you do this.

⚠ CAUTION: The motor is heavy and can swing down quickly. You can be cut or injured if the arbor shaft hits you. Hold the motor when you unlock the bevel lock.

6. Turn the *motor* until the *arbor shaft* is pointing straight down toward the *saw*. (Figure 38)

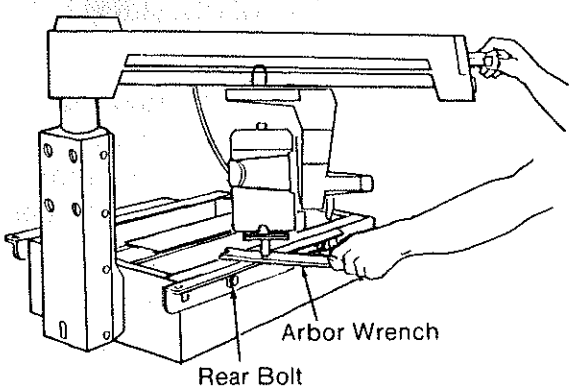

Fig. 38

7. Lock the *bevel lock* to hold the *motor* in this position.

8. Unlock the *miter lock* and move the *arm* to the left as far as it will go (about 50° miter).

9. Unlock the *rip lock* and move the *motor* until the *arbor shaft* is over the left *table support*. (Figure 38)

10. Mark the point on the *table support* under the center of the *arbor shaft*.

11. Place the handle end of the *arbor wrench* over this point and lower the *arm* until the *arbor shaft* is just touching the *wrench*. The *wrench* should slide back and forth with slight contact. (Figure 38)

12. Tighten the rear bolt using a 1/2 inch wrench.

13. Move the *arm* and *motor* until the *arbor shaft* is over the front bolt on the left *table support*. Do not change the elevation of the *arm* as you move from point to point. (Figure 39)

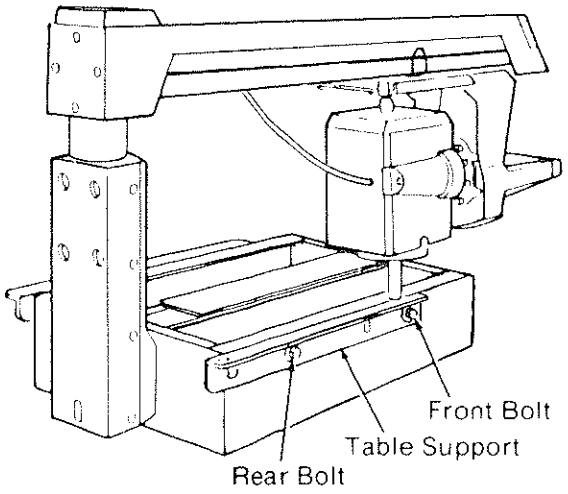

Fig. 39

14. Mark the point on the *table support* under the center of the *arbor shaft*. (Figure 40)

15. Place the handle end of the *arbor wrench* over this point. (Figure 40)

16. Slide the front end of the *table support* up or down until the handle end of the *arbor wrench* just fits between this point and the *arbor shaft*. The *wrench* should slide back and forth with slight contact.

17. Tighten the bolt under this point using a 1/2 inch wrench.

18. Repeat steps 13-17 with the *arbor shaft* over the front and rear bolts on the right *table support*. Slide the rear end of the *table support* up or down when the *arbor shaft* is over the rear bolt (see step 16).

19. Move the *arbor shaft* over all four points again.

20. Place the handle end of the *arbor wrench* over each point and make sure that the *arbor shaft* just touches the *wrench*. The *wrench* should slide back and forth with slight contact.

21. **If** the *arbor shaft* just touches the *arbor wrench* at each point, go to the next section, **or**

If the *arbor wrench* will not fit between the *arbor shaft* and the *table support* at any point, repeat steps 8-21 until the *table supports* are level, **or**

If there is a gap between the *arbor wrench* and the *arbor shaft* at any point, repeat steps 8-21 until the *table supports* are level.

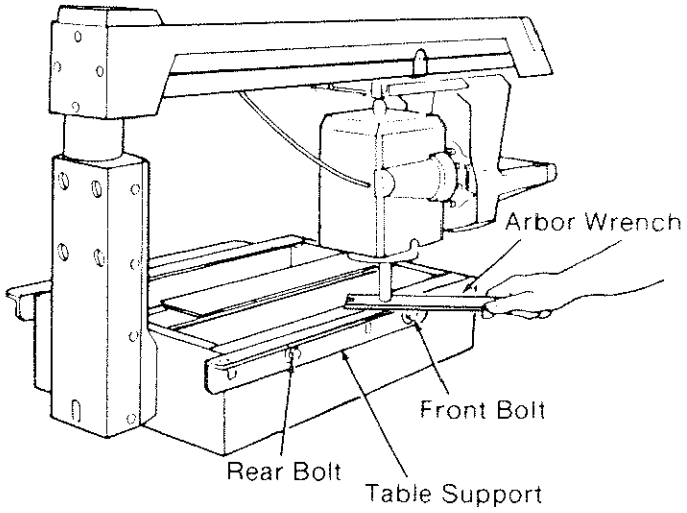

Fig. 40

Mounting the Front Table

1. Make sure that the *front table* is upside down.

2. Place a *tee nut* over the *leveling hole* and hammer it into place. (Figure 41)

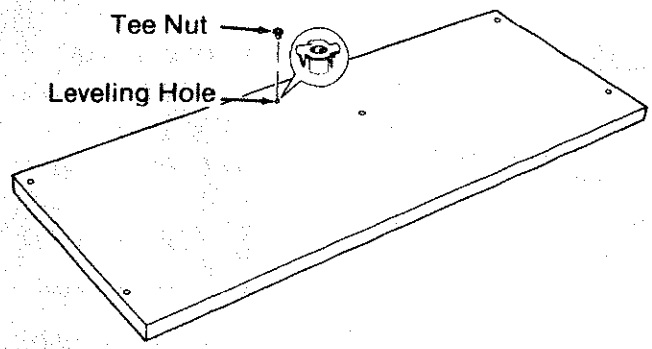

Fig. 41

Fig. 42 - Nut Tee

3. Slide a *U-clip* onto the center channel of the *saw* as shown. (Figure 43 & 44)

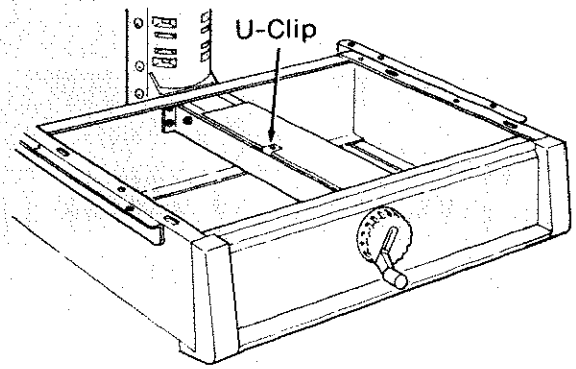

Fig. 43

Fig. 44 - U Clip

4. Place the *front table* on the *saw* so that the *mounting holes* in the *table* line up with holes in the *table supports* and center channel of *saw*. (Figure 45)

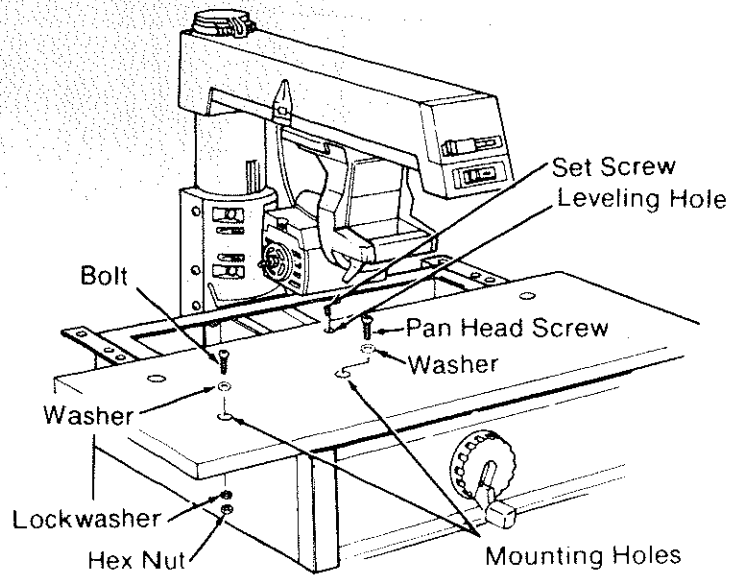

Fig. 45

5. Start the *cup point set screw* through the *leveling hole*. Do not tighten. (Figures 45 & 46)

Fig. 46 - Cup Point Set Screw

6. Put a *washer* in each of the *mounting holes*. (Figures 45 &47)

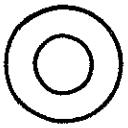

Fig. 47 - Washer for Mounting Holes

7. Start a *pan head machine screw* through the center *mounting hole*. Do not tighten. (Figures 45 & 48).

Fig. 48 - Pan Head Machine Screw

8. Install the *pan head bolts* through the other four *mounting holes*. Put a lockwasher and hex nut on each bolt and tighten using a Phillips screwdriver. (Figures 45 & 49)

Fig. 49 - Pan Head Bolt

9. Lay the edge of the *rear table* across the center of the *front table*, and check to see if there is a gap between the two. (Figure 50)

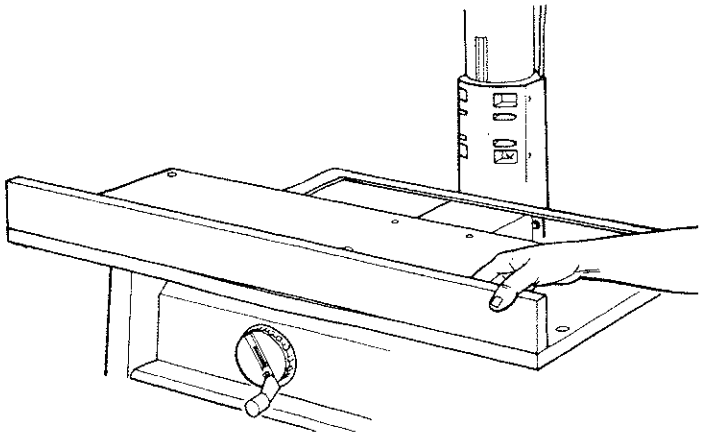

Fig. 50

10. **If** there is a gap larger than 1/32 inch, go to step 11, **or**

If there is a gap less than 1/32 inch, or no gap at all, tighten the *leveling screw* and the center *mounting screw*. Do not overtighten. Then go to step 12.

11. **If** the gap is at the center of the *table*, tighten the *leveling screw* until the gap is gone. Then tighten the center *mounting screw* and go to step 12, **or**

If the gap is at the sides of the *table*, tighten the center *mounting screw* until the gap is gone. Then tighten the *leveling screw* and go to step 12.

12. Lay the edge of the *rear table* across the center of the *front table* and check again for gaps.

13. **If** there is a gap larger than 1/32 inch, go back to step 11 and repeat, **or**

If there is a gap less than 1/32 inch, or no gap at all, go to the next section.

Mounting Table Clamps

The following parts are used in mounting the table clamps:

A Thumbscrews 2
B Square Nuts 2
C Cup Washer 2
D Clamp Bracket 2

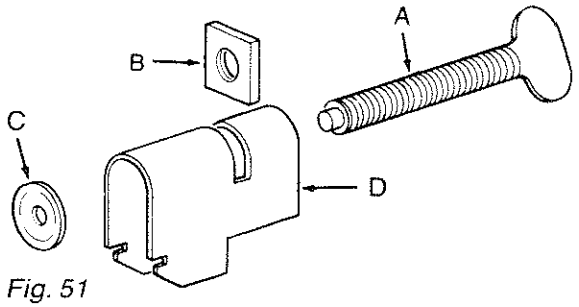

Fig. 51

1. Drop square nut in slot at top of clamp bracket.

2. Turn thumbscrew clockwise until the point comes approximately 1/2" out other end.

3. Tilt clamp bracket forward and snap in place in rectangular shaped hole at back of table support. (Figure 52)

4. Attach cup washer by holding washer against rear table. Turn thumbscrew clockwise until it snaps into small hole in cup washer.

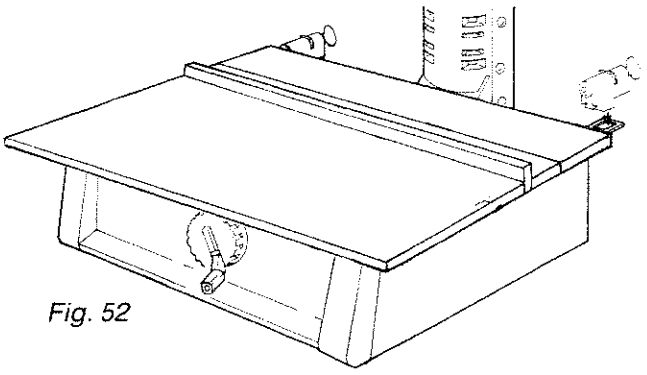

Fig. 52

5. Repeat steps 1 through 4 with the other table clamp.

Squaring Crosscut Travel

The blade must travel perpendicular to the fence along the radial arm in order for crosscuts to be accurate. If the radial arm is not perpendicular to the fence, there will be a slight miter angle in all crosscuts.

⚠ WARNING: Plugging in the saw during alignment can result in your fingers, hands, or arm being cut off from blade contact. Do not plug in the saw at any time during alignment. The saw should only be plugged in when it is to be used.

1. Place the *radial arm* in the 0° miter position and lock the miter lock.

2. Raise the *radial arm* about 2 inches above the front table.

3. Unlock the *bevel lock,* and turn the *motor* so that the *arbor* is perpendicular to the *table.* (Figure 53).

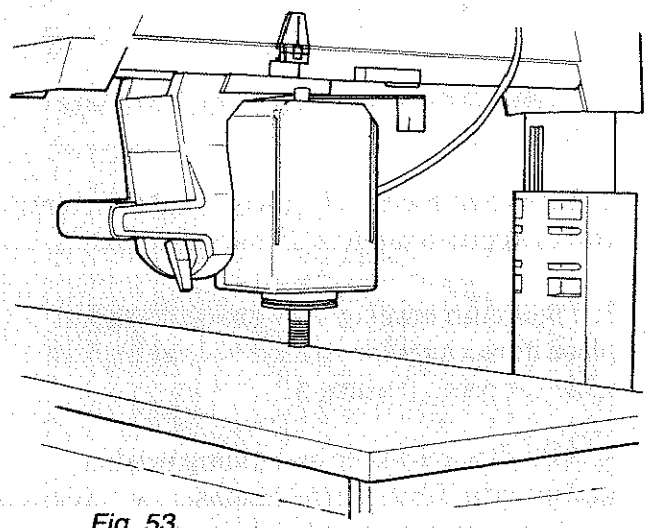

Fig. 53

4. Unlock the *rip lock* and move the *motor* until the *motor arbor* is over the *front table.*

5. Lock the *rip lock, miter lock* and *bevel lock.*

6. Lower the *radial arm* until the *motor arbor* is slightly above the front table.

7. Lay a framing square on the *front table* with the long edge along the back of the *table* and the short edge alongside the *motor arbor.* (Figure 54)

8. Move the framing square toward the *motor arbor* until the arbor and square touch each other. (Figure 54)

9. Unlock the *rip lock* and move the *motor arbor* back and forth along the *radial arm* as shown by the arrows. Do not move the framing square.

10. **If** the *motor arbor* just touches the square at all points, no change is needed. Go to step 14, **or**

If the *motor arbor* moves away from the square or tries to "walk" on top of it, go to step 11. (Figure 54)

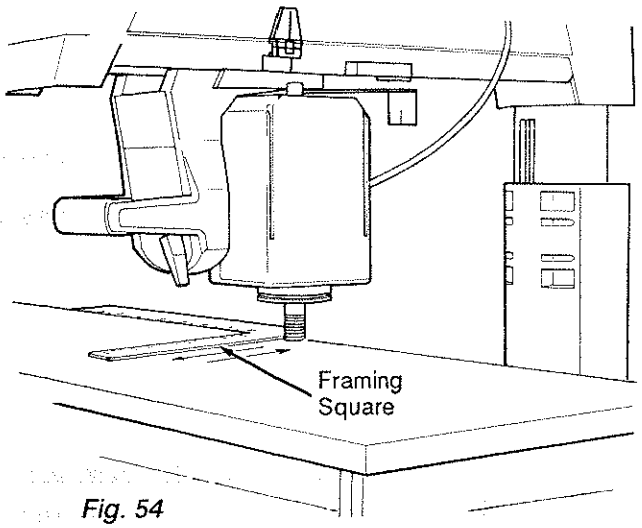

Fig. 54

11. Use a *3/16" hex "L" wrench* to loosen the four screws in the front of the *column support* slightly, if you have not already done so in the Adjusting Elevation section. (Figure 55)

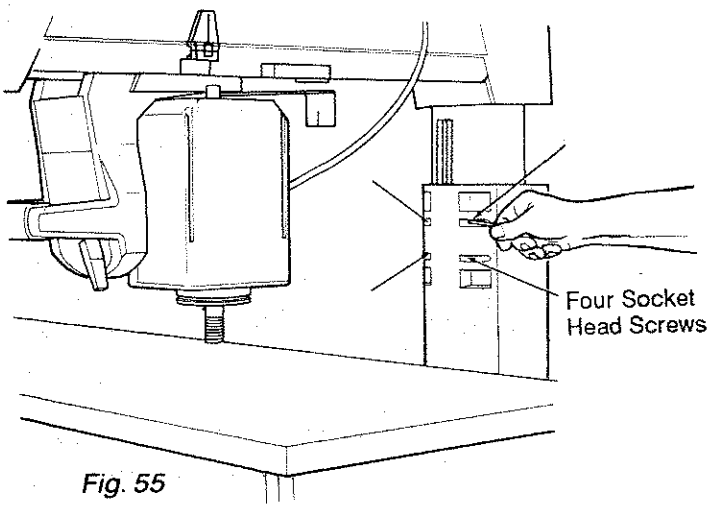

Fig. 55

12. Use the top two screws to move the *radial arm* into line:

If the *motor arbor* moved away from the square, tighten the top right screw to move the *arm* to the left. Then tighten the top left screw to meet the *column*. Go to step 13, **or**

If the *motor arbor* tried to "walk" on the square, tighten the top left screw to move the *arm* to the right. Then tighten the top right screw to meet the *column*. Go to step 13.

13. Move the *motor* back and forth along the *radial arm*. Repeat step 12 until the *motor arbor* just touches the square at all points. Then go to step 14.

14. Tighten the bottom screws in the front of the *column support*, switching from right to left several times so that you do not force the *radial arm* out of line. Do not overtighten or it will be difficult to raise and lower the *radial arm*.

15. Raise and lower the *radial arm*. If this is difficult, loosen the four screws in the front of the *column support* slightly and try again. Loosen all of these screws the same amount so that you do not force the *radial arm* out of line.

16. Repeat step 15 until movement of the *radial arm* is smooth but firm. Then go to step

17. Lay a framing square on the *front table* with the long edge along the back of the *table* and the short edge alongside the *motor arbor*, as before.

18. Move the framing square toward the *motor arbor* until the arbor and square touch.

19. Move the *motor arbor* back and forth along the *radial arm*. Do not move the square.

20. **If** the *motor arbor* just touches the edge of the square at all points, go to step 21, **or**

If the *motor arbor* moves away from the edge of the square or tries to "walk" on top of it, go back to step 12 and repeat.

21. Set miter indicator on 0° position as shown. (Figure 55-A)

22. Lock the *rip lock*, put the *spacer*, *fence* and *rear table* back in place, lock the *table clamp*, and go to the next section.

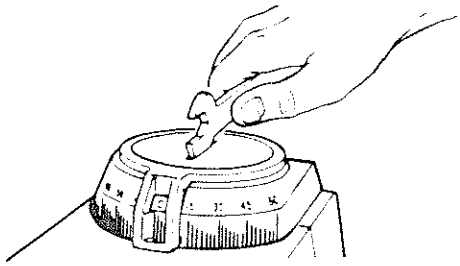

Fig. 55-A

Positioning Rear Table Boards and Fence

1. Position the *ripfence* next to the *front table* as shown. (Figure 55-B)

2. Next drop in the *table spacer* and then the *rear table.*

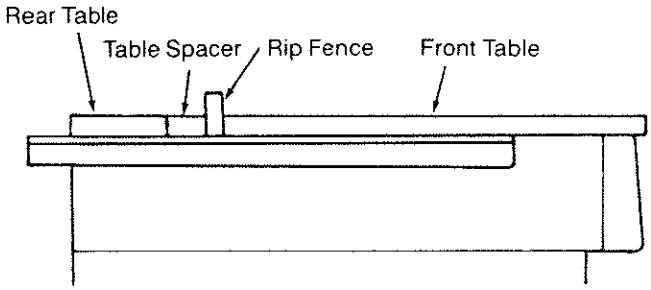

Fig. 55-B

Squaring Blade to Table for Crosscutting

These steps are necessary so that your blade will be perpendicular to the table and cuts will be accurate. If this is not done correctly, your cuts will have a slight bevel angle.

1. Place the *radial arm* in the 0° miter position and lock the miter lock.

2. Place the *blade* on the *arbor shaft* with a **blade collar** on each side. make sure that the directional arrow is on the outside of the *blade,* and the teeth are pointing down at the front side of the blade. (Figure 56)

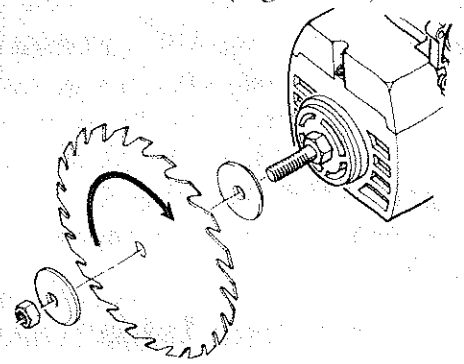

Fig. 56

3. Place the *arbor nut* on the *arbor shaft* and use the *arbor wrenches* to tighten. The *arbor shaft* has left-handed threads, so you will have to turn the nut counterclockwise to tighten. Do not overtighten.

⚠ CAUTION: Overtightening the arbor nuts may cause the blade collars to warp and the blade to wobble while cutting. Use the arbor wrenches to tighten the arbor nuts but do not overtighten.

4. Lock the *table clamps* and *rip lock.*

5. Place the long edge of the framing square on the *table* and the short edge against the *blade.* Make sure that the square is against the blade surface and not the set of a tooth.

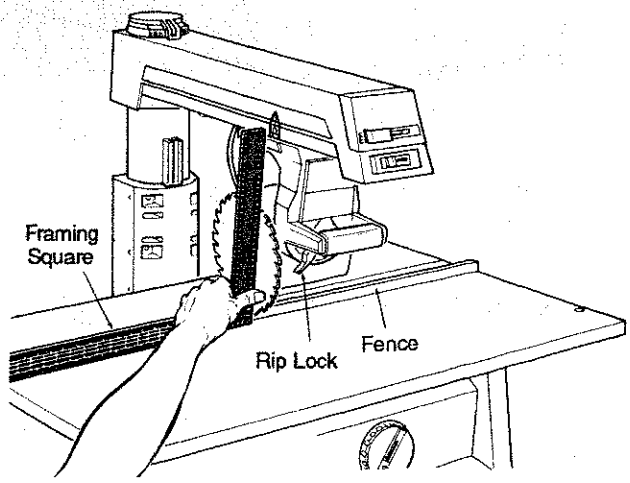

Fig. 56-A

6. Turn the *blade* with your hand several times and check to see if the square is flush with the *blade.*

7. **If** the square is flush with the *blade* after each rotation, no change is needed. (Figure 56-A) Go to the next section, **or**

If there is a gap between the square and the *blade* after any rotation(Figure 57), go to step 8. **Note:** Saw blades are manufactured to different specifications. Therefore a small gap is permissible on some brands.

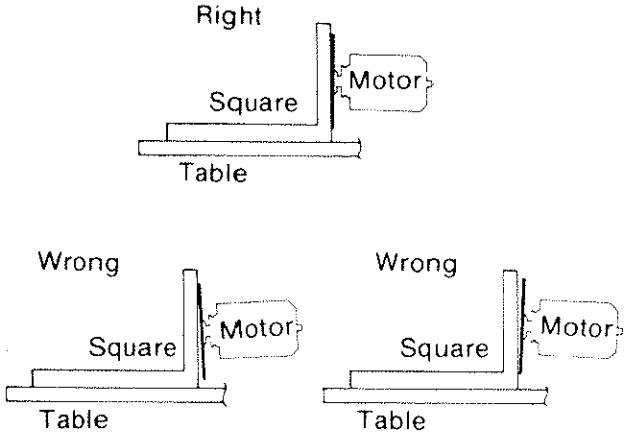

Fig. 57

8. Unlock the *bevel lock,* but do not pull the *index pin.*

9. Loosen the four screws behind the *yoke* using a 3/16 inch hex-L wrench. (Figure 58)

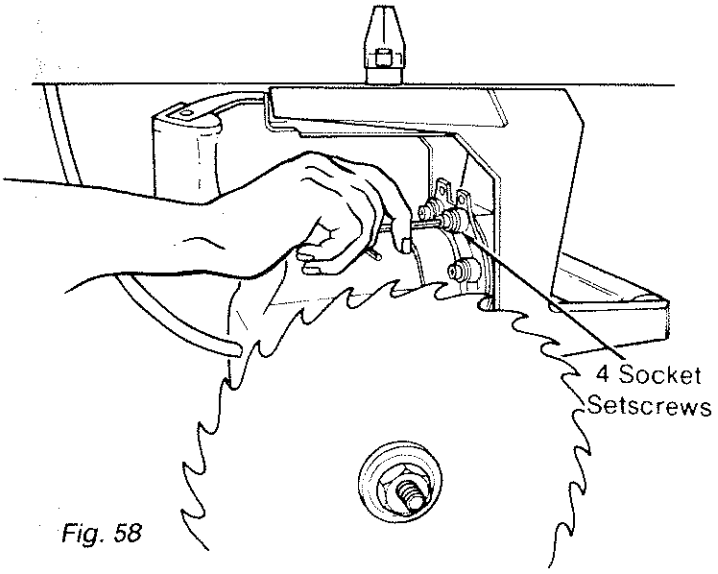

Fig. 58

10. Hold the square in place and move the *motor* slowly until the square is flush with the *blade.*

11. Hold the *motor* tightly and lock the *bevel lock.* Do not let the *motor* move out of place.

12. Check the square to make sure that it is still flush with the *blade.*

13. Tighten the four screws behind the *yoke.*

14. Raise the *radial arm* until the *blade* is 1-1/2 inches above the *table.*

15. Unlock the *bevel lock* and move the *motor* to the 45° bevel position. (Figure 59)

⚠ CAUTION: The motor is heavy and can swing down quickly. You can be cut or injured if the blade hits you. Hold the motor when you unlock the bevel lock.

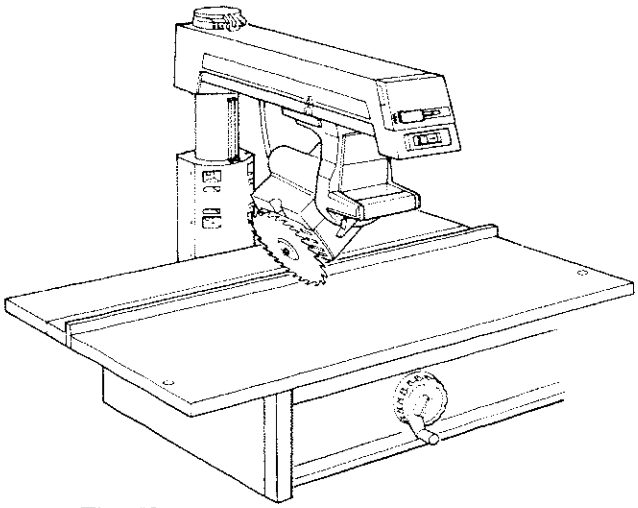

Fig. 59

16. Move the *motor* back to the 0° bevel position and lock the *bevel lock.*

17. Lower the *radial arm* until the *blade* is just above the *table.*

18. Place the long edge of the framing square on the *table* and the short edge against the *blade* as before. Make sure the square is against the surface of the *blade* and not the set of a tooth.

19. Turn the *blade* with your hand several times and check to see if the square is flush with the *blade.*

20. **If** the square is flush with the *blade* after each rotation, go to Step 19, or **If** there is a gap between the square and the *blade* after any rotation, go back to step 6 and repeat.

21. Install bevel scale indicator by inserting one end into the opening in the yoke. Slide the indicator to one side and push until it snaps in place. Tabs are located on the outside of the opening. Adjust indicator by sliding red line to 0° position. (Figure 60)

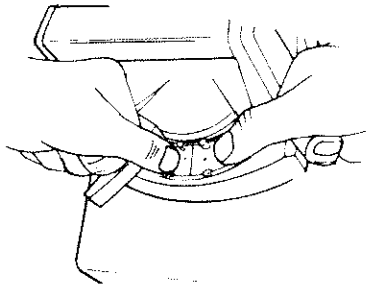

Fig. 60

Squaring Blade to Fence

These steps are done so that your blade will be perpendicular to the fence. This will help reduce the risk of kickback when ripping, and splintering of the workpiece and burning of the kerf when ripping and crosscutting.

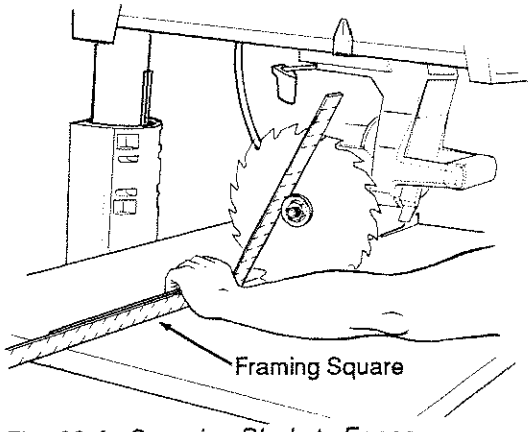

Fig. 60-A - Squaring Blade to Fence

1. Put the *radial arm* in the 0° miter position with the *blade* just in front of the *fence.* (Figure 60-A)

2. Lock the *rip lock.*

3. Place the framing square with the long edge against **both** the *fence* and the *table,* and the short edge against the *blade* just above the *arbor shaft.* Make sure that the edge of the square is on the *blade* and not on the set of a tooth. (Figure 60-A)

4. Turn the *blade* with your hand several times and check to see if the square is flush with the *blade.*

5. **If** the square is flush with the *blade* after each rotation, no change is needed. (Figure 61) Go to the next section, **or**

If there is a gap between the square and the *blade* after any rotation, go to step 6. (Figure 61)

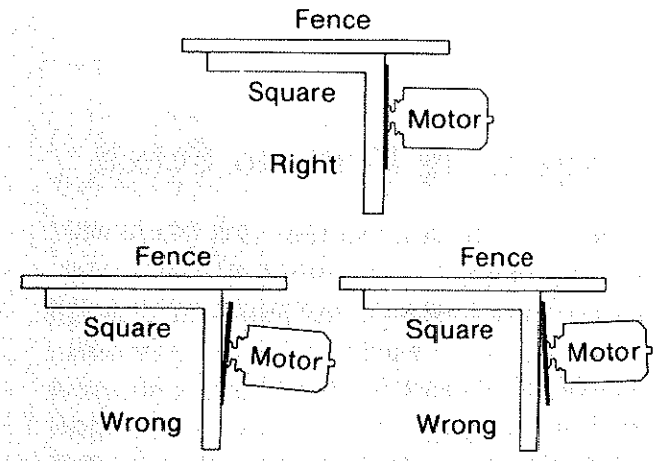

Fig. 61

6. Unlock the *swivel lock.*

7. Loosen the four screws under the *yoke* using a 3/16 inch hex-L wrench and pliers if necessary. (Figure 62)

⚠WARNING: The hex-L wrench may break when used with pliers to loosen screws. Thrown pieces could hit you in the face and/or eyes. Wear safety goggles when using a hex-L wrench with pliers.

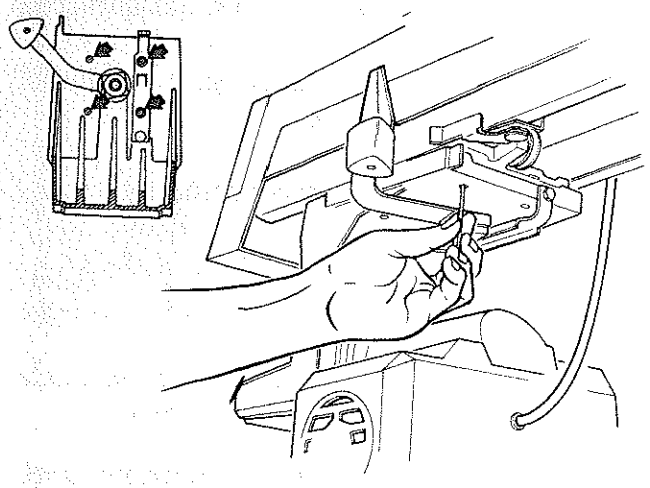

Fig. 62

8. Hold the square in place and turn the *motor* until the square is flush with the *blade.*

9. Hold the *saw handle* tightly and lock the *swivel lock.*

10. Check the square to make sure it is still flush with the *blade.*

11. Tighten the four screws under the *yoke* using a 3/16 inch hex-L wrench.

12. Place the framing square with the long edge against **both** the *fence* and the *table,* and the short edge against the *blade* just above the *arbor shaft,* as before. Make sure that the edge of the square is on the *blade* and not on the set of a tooth.

13. Turn the *blade* with your hand several times and check to see if the square is flush with the *blade.*

14. If the square is flush with the *blade* after each rotation, go to the next section, or

If there is a gap between the square and the *blade*, go back to step 6 and repeat.

Squaring Blade to Table for Ripping

1. Unlock the *swivel lock* and turn the *motor* to the out-rip position with the *motor* between the *blade* and *fence.* (Figure 63)

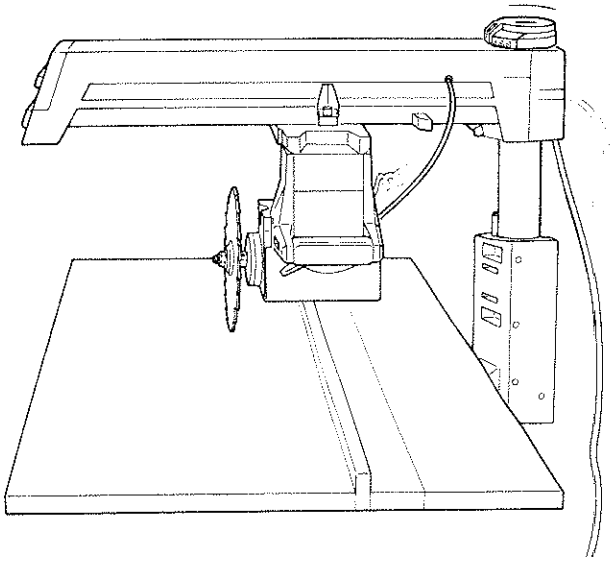

Fig. 63 - Out-rip Position

2. Lock *swivel lock* and *rip lock.*

3. Place the long edge of the framing square on the *table* and the short edge against the *blade* alongside the *arbor shaft.* Make sure the square is against the surface of the *blade* and not on the set of a tooth. (Figure 64)

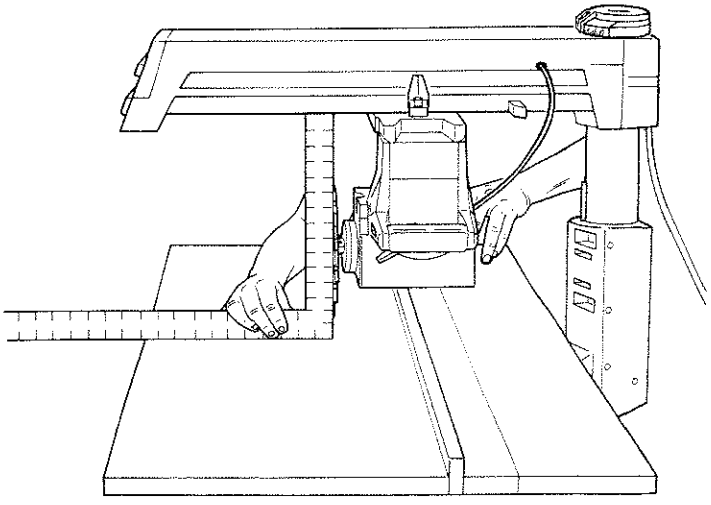

Fig. 64

4. Turn the *blade* with your hand several times and check to see if the square is flush with the *blade.*

5. **If** the square is flush with the *blade* after each rotation (Figure 65) go to step 11, **or**

If there is a gap between the square and the *blade* after any rotation (Figure 65) , go to step 6.

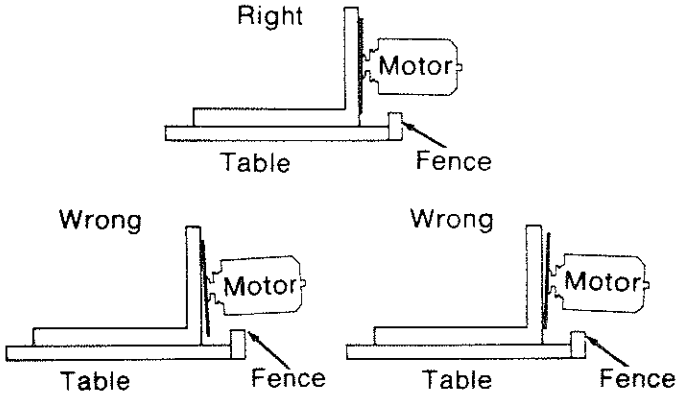

Fig. 65

6. Loosen the hex nut on the *rear carriage bearing.* Use a 9/16 inch wrench to hold the bolt and a 1/2 inch wrench to loosen the nut. (Figure 66)

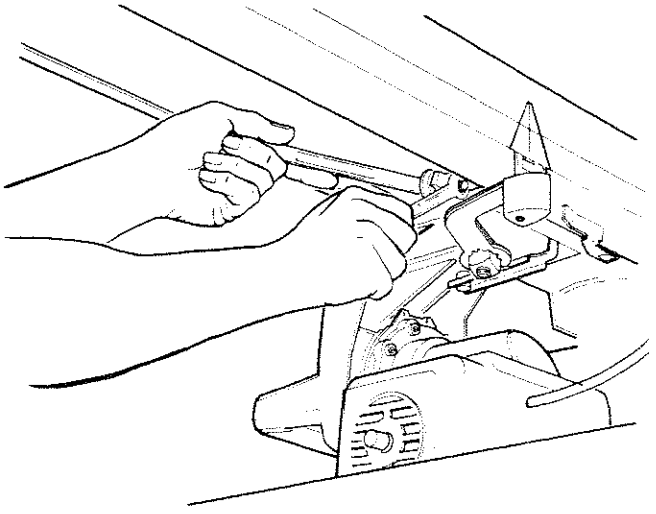

Fig. 66

7. Hold the square in place and use the 9/16 inch wrench to turn the bolt until the square is flush with the *blade.*

8. Hold the bolt firmly, and retighten the hex nut using a 1/2 inch wrench.

9. Turn the *blade* several times and check to see if the square is still flush with the *blade.*

10. **If** the square is flush with the blade after each rotation, go to step 11, **or**

If there is a gap between the square and the blade, go back to step 6 and repeat.

11. Unlock the *rip lock* and move the *motor* as far back as it will go.

12. Pinch the *front carriage bearing* with your fingers as tightly as possible while you pull the *motor* forward with the other hand. Try to keep the *carriage bearing* from turning. (Figure 67)

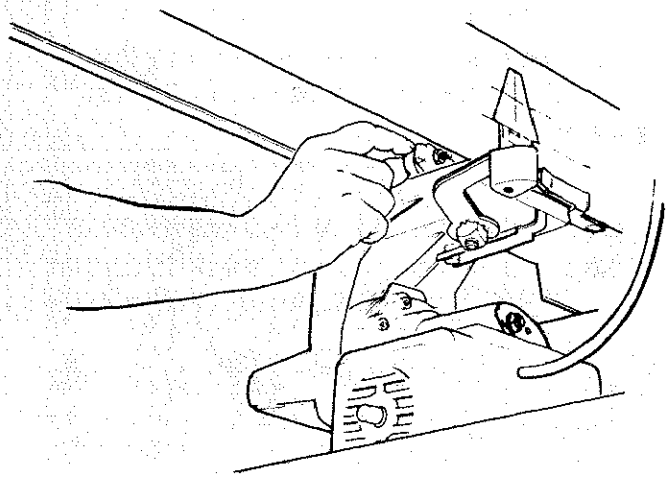

Fig. 67

13. Move the *motor* as far forward as it will go.

14. Pinch the *rear carriage bearing* with your fingers as tightly as possible while you pull the *motor* toward the rear with the other hand. Try to keep the *carriage bearing* from turning.

15. **If** you can keep either of the *carriage bearings* from turning while the *motor* moves along the *radial arm*, go to step 16, **or**

If you cannot keep the *carriage bearings* from turning while the motor moves, go to step 22.

16. Wipe the V-shaped groove in each *carriage bearing,* and the track they ride on, with a cloth to remove sawdust and other debris. Oil if necessary.

17. Loosen the hex nut on the *carriage bearing* that was loose. Use a 9/16 inch wrench to hold the bolt and a 1/2 inch wrench to loosen the nut.

18. Turn the bolt using a 9/16 inch wrench until the looseness is gone.

19. Hold the bolt firmly with the 9/16 inch wrench and tighten the hex nut using a 1/2 inch wrench. Do not overtighten.

20. Adjust the other carriage bearing by the same amount so that the *blade* will still be square with the *table.*

21. Repeat steps 11-15 to make sure that the *carriage bearings* are not still loose.

22. Place the long edge of the framing square on the *table* and the short edge against the *blade* just above the *arbor shaft*, as before. Make sure the square is against the surface of the *blade* and not on the set of a tooth.

23. Turn the *blade* with your hand several times and check to see if the square is flush with the *blade.*

24. **If** the square is flush with the *blade*, go to the next section, **or**

If there is a gap between the square and the *blade,* go back to step 6 and repeat.

Making Blade Parallel to Table

These steps are done to help prevent the workpiece from being thrown or damaged when the saw is used for edging.

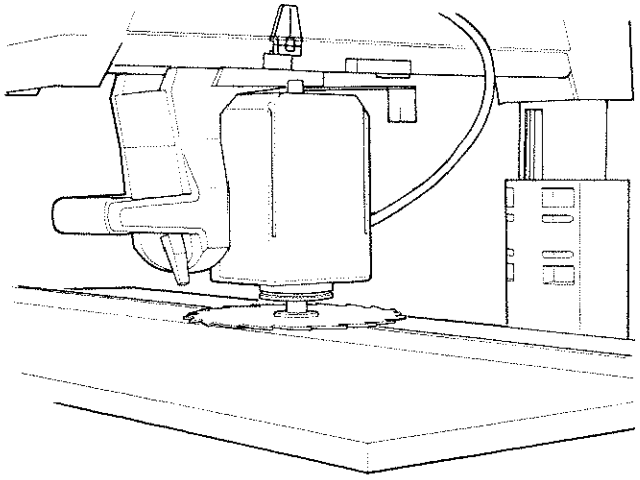

Fig. 68

1. Put the *radial arm* in the 0° miter position.

2. Raise the *radial arm* until the *blade* is 1-1/2 inches above the *front table.*

3. Unlock the *bevel lock,* and turn the *motor* so that the *blade* is parallel to the *table.* (Figure 68)

⚠ CAUTION: The motor is heavy and can swing down quickly. You can be cut or injured if the blade hits you. Hold the motor when you unlock the bevel lock.

4. Lock the *bevel lock, rip lock* and *swivel lock.*

5. Place the corner of the framing square against the *fence* so that the long edge is on the *table* under the *blade* and the short edge is sticking up in the air. Make sure that the long edge is perpendicular to the *fence.* (Figure 69)

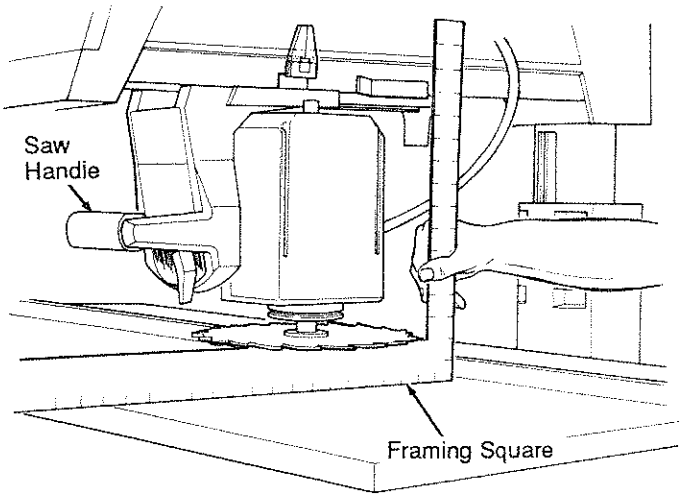

Fig. 69

6. Lower the *radial arm* until the *blade* just rests on the edge of the framing square. Make sure that the square is on the blade and not on the set of a tooth.

7. Turn the *blade* with your hand several times and check to see if the square is flush with the *blade.*

8. If the square is flush with the *blade* after each rotation (Figure 70) go to step 18, or

If there is a gap between the square and the *blade* after any rotation (Figure 70) go to step 9.

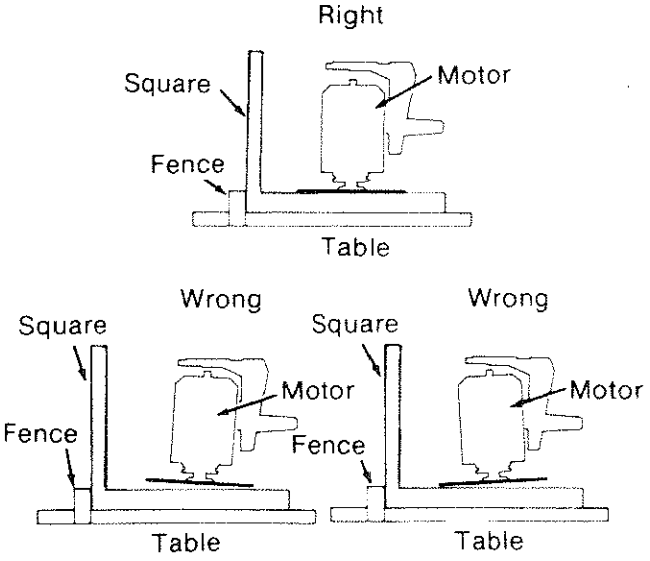

Fig. 70

9. Unlock the *bevel lock.*

10. Loosen the two screws on the back of the *motor support* using a 3/16 inch hex-L wrench and pliers if necessary. (Figure 71)

⚠ WARNING: The hex-L wrench may break when used with pliers to loosen screws. Thrown pieces could hit you in the face and/or eyes. Wear safety goggles when using a hex-L wrench with pliers.

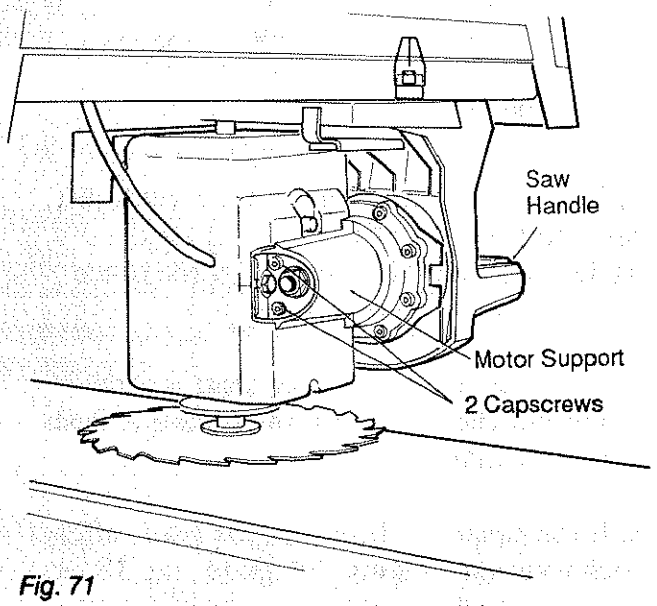

Fig. 71

11. Hold the square in place, and lift or lower the bottom side of the *motor support* until the square is flush with the *blade.*

12. Hold the *motor* firmly and lock the *bevel lock.*

13. Check the square to make sure that it is still flush with the *blade.*

14. Tighten the two screws on the back of the *motor support.*

15. Place the corner of the framing square against the *fence* so that the long edge is on the *table* under the *blade* and the short edge is sticking up in the air, as before. Make sure that the long edge is perpendicular to the *fence.*

16. Turn the *blade* with your hand several times and check to see if the square is flush with the *blade.*

17. **If** the square is flush with the blade after each rotation, go to step 18, **or**

If there is a gap between the square and the blade, go back to step 9 and repeat.

Installing Guard / Setting Spreader

The blade guard and the spreader are very important safety features of your saw. The guard covers a large part of the blade and reduces the risk of amputation. The spreader rides in the kerf of the cut wood during ripping, and helps keep the two sides from pinching the blade and causing a kickback.

⚠ WARNING: Fingers, hand, or arm can be cut off from blade contact if the blade guard is not used properly. Always put the blade guard on your saw and adjust it correctly.

⚠ WARNING: Kickback can occur if the spreader is not in line with the blade. You can be injured or killed. Always adjust the spreader and make sure that it is directly in line with the blade.

1. Loosen the *guard clamp screw* until it no longer touches the *metal plate*. (Figure 73)

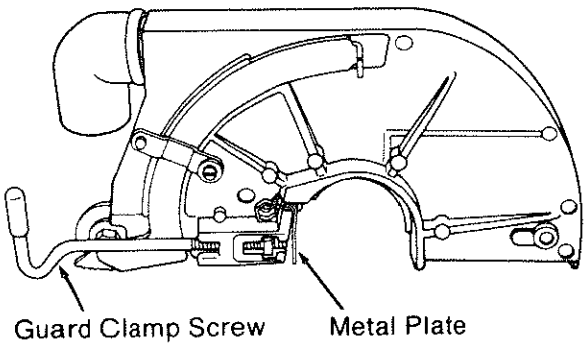

Fig. 73

2. Place the *guard* over the *blade*. You will feel the *guard* fall into place when the ridge on the inside of the *guard* slides into the slot on the *motor*. (Figure 74)

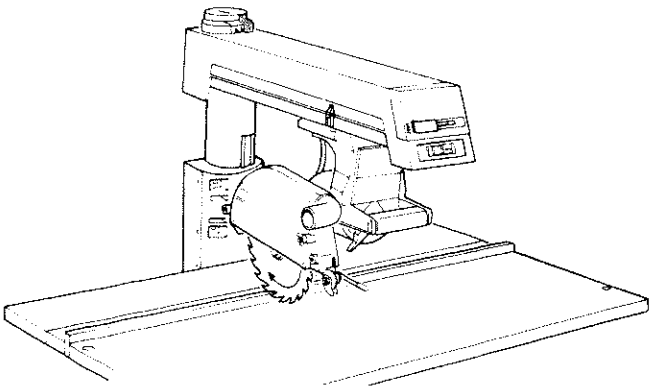

Fig. 74

3. Make sure that the lower edge of the *guard* is parallel to the table. (Figure 75)

4. Tighten the *guard clamp screw*.

5. Unlock the *swivel lock* and turn the *motor* to the in-rip position, with the *blade* between the *motor* and the *fence*. (Figure 75)

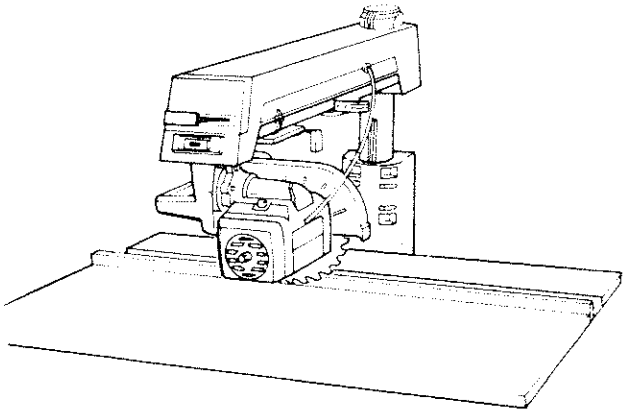

Fig. 75 - In-rip Position

6. Lock the *swivel lock*.

7. Lower the *radial arm* until the *blade* is just above the *table*.

8. Unlock the *rip lock* and move the *motor* back until the *blade* touches the *fence*.

9. Lock the *rip lock*.

10. Loosen the wing screw that holds the *spreader* in place.

11. Lower the *spreader* and *antikickback pawls* until the *spreader* is against the *fence*, and the *pawls* on one side of the *spreader* are on top of the *fence*. (Figure 76)

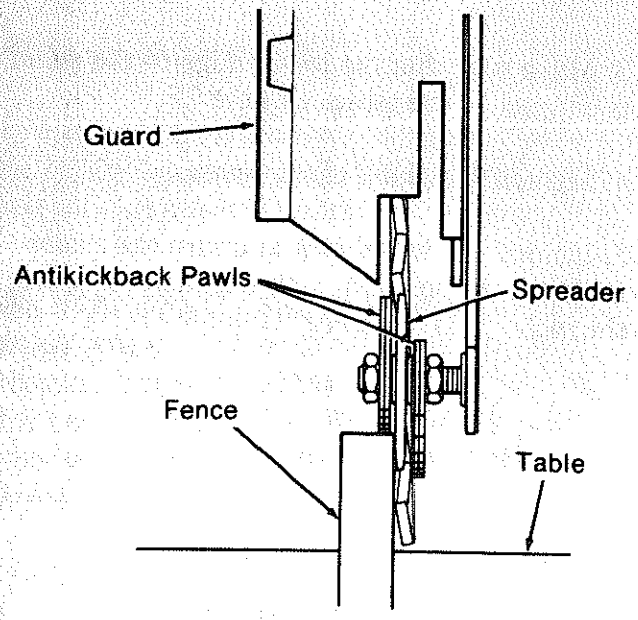

Fig. 76

12. **If** the *spreader* and *blade* both rest against the *fence,* no adjustment is needed. (Figure 77 -A) Go to step 17, **or**

If the *spreader* is in front of the *fence* but not touching it (Figure 77-B), go to step 13, **or**

If the spreader hits the top of the *fence* (Figure 77 -C), go to step 13.

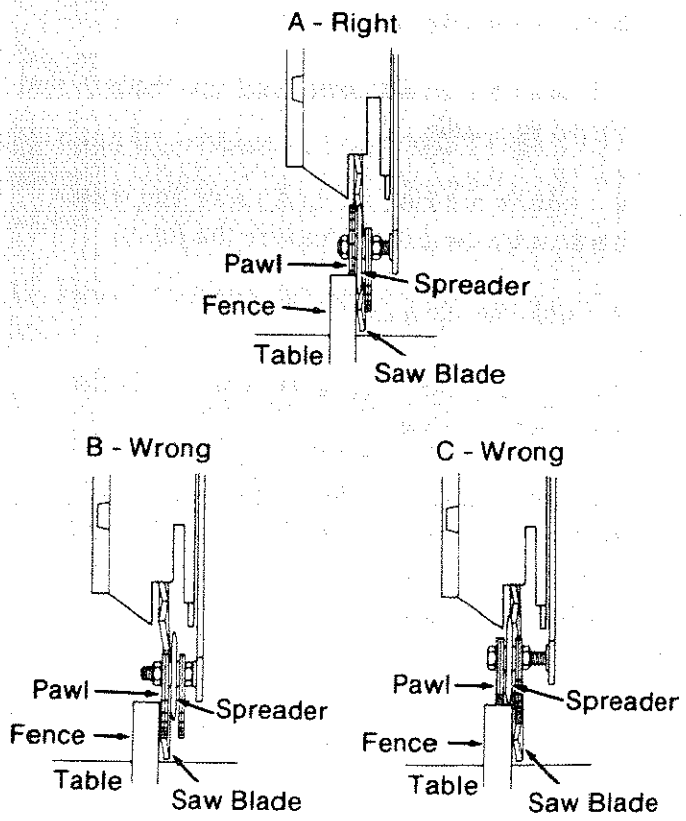

Fig. 77 - A,B,C

13. Loosen both nuts on the *spreader* using a 1/2 inch wrench.

14. Slide the *spreader* with your hand until it is against the *fence* directly behind the *blade.*

15. Tighten both nuts using a 1/2 inch wrench. Do not move the *spreader* as you tighten these nuts.

16. Check the *blade* and *spreader* again to make sure that they are both against the *fence.* If not, go back to step 13 and repeat.

17. Once the *blade* and *spreader* are in line, raise the *spreader* up to the *guard* and tighten the wing screw to hold it in place.

18. Unlock the *rip lock.*

19. Pull the *motor* forward so that the *blade* is away from the *fence* and lock the *rip lock.*

20. Unlock the *swivel lock.*

21. Turn the *motor* to the crosscut positon with the blade and arm perpendicular to the fence.

22. Lock the *swivel lock.*

Installing and Adjusting Rip Scale Indicators

NOTE: The *rip scales* indicators are intended to be used for quick settings. Adjustments will be necessary for blades of different thicknesses. For greater accuracy take direct measurements between blade and fence with ruler or measuring tape.

1. Locate *rip scale indicators* in a loose parts bag and slide indicators onto mounting brackets.

2. Unlock the swivel lock and move the blade into the OUT-RIP position. Lock the swivel lock.

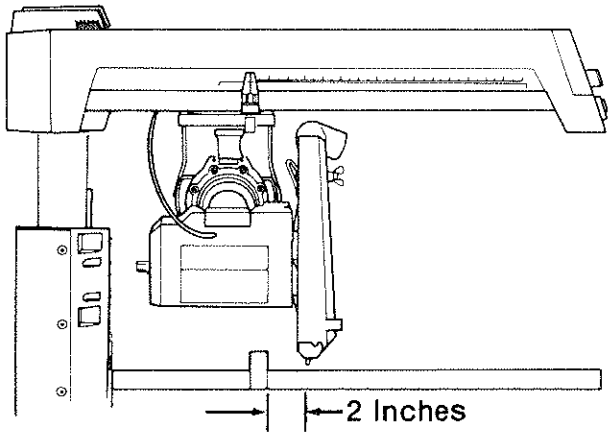

Fig. 78- Out-Rip Saw Position (Infeed End)

3. Measures 2″ from rip fence to nearest tooth on the blade and lock rip lock handle.

4. Adjust *''out rip'' scale* indicator by sliding until indicator line reads 2 inches on the upper of the two ''out rip'' scales as illustrated. Out rip scales are located on left side of arm.

5. Unlock rip lock and move blade away from fence. Unlock the swivel lock and rotate the motor to the IN-RIP position. Lock the swivel lock. Push the motor until the blade rests against the fence.

6. Adjust ''in-rip'' scale indicator (located on right side of arm) by sliding until indicator line reads ''0'' inches.

Electrical Connections

Motor Specifications

The AC motor used in this saw is a capacitor-start, non-reversible type having the following specifications:

Voltage	120
Amperes	11
Hertz (cycles)	60
Phase	Single
RPM	3450
Rotation of Arbor Shaft	Clockwise

Power Supply

⚠ WARNING: Your saw is wired at the factory for 120V operation. Connect to a 120V, 15-AMP, branch circuit and use a 15-AMP, time delay fuse or circuit breaker. Failure to connect in this way can result in injury from shock or fire.

Your saw must be properly grounded. Not all outlets are properly grounded. If you are not sure that your outlet is properly grounded, have it checked by a qualified electrician.

⚠ WARNING: If not properly grounded this power tool can cause electrical shock, particularly when used in damp locations.

⚠ WARNING: If an electrical shock occurs, your reaction to the shock may bring your hands into contact with the blade.

⚠ WARNING: To avoid shock or fire, if power cord is worn, cut, or damaged in any way have it replaced immediately.

Your unit is wired for 120V and it has a plug that looks like the one shown below. (Figure 79)

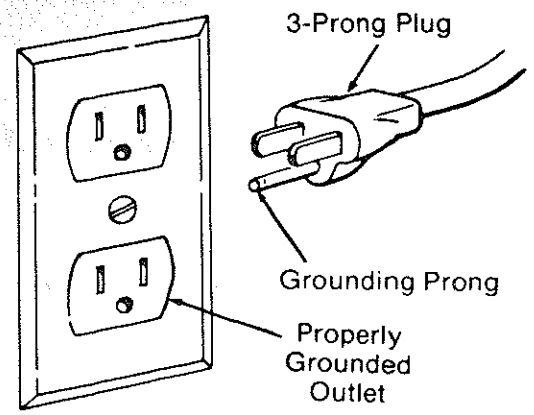

Fig. 79 - Plug for Less Than 150V

This power tool is equipped with a 3-conductor cord and grounding type plug. The ground conductor has a green jacket and is attached to the tool housing at one end and to the ground prong in the attachment plug at the other end.

This plug requires a mating 3-conductor grounded type outlet as shown above. If you have an outlet that is of the two prong type, it is recommended that you have a qualified electrician replace the it with a properly grounded three prong outlet.

Extension Cords

The use of any extension cord will cause some loss of power. Use the following table to determine the minimum wire size (A.W.G.) extension cord. Use only 3- wire extension cords which have 3-prong grounding type plugs and 3-pole receptacles which accept the tool's plug.

Length of Conductor	Wire sizes Required (American Wire Gage No.)
	120V Lines
0 - 25 feet	No.14
26 - 50 feet	No.12
51 - 100 feet	No. 8

For circuits that are farther away from electrical circuit box, the wire size must be increased proportionately in order to deliver ample voltage to the saw motor.

Crosscutting

Crosscutting is used to cut a workpiece to length. The workpiece is held against the fence. The saw blade is pulled through the workpiece. Cuts are usually made across the grain of the workpiece.

Types of Crosscuts

The basic types of crosscuts are shown below. Notice the hand and body position in each.

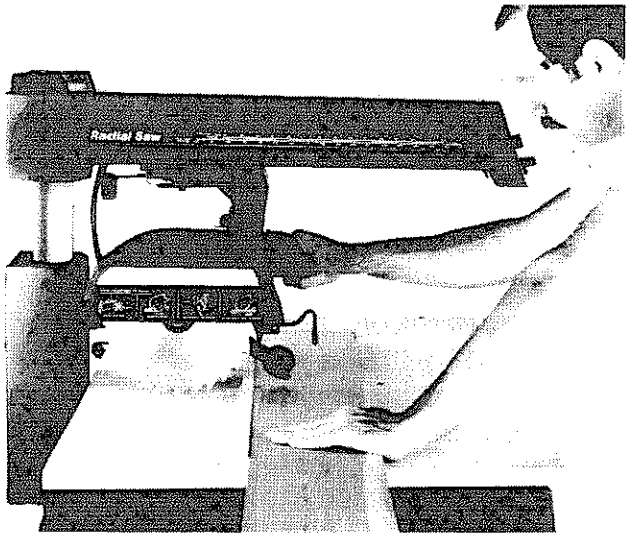

Fig. 81 - Straight Crosscut

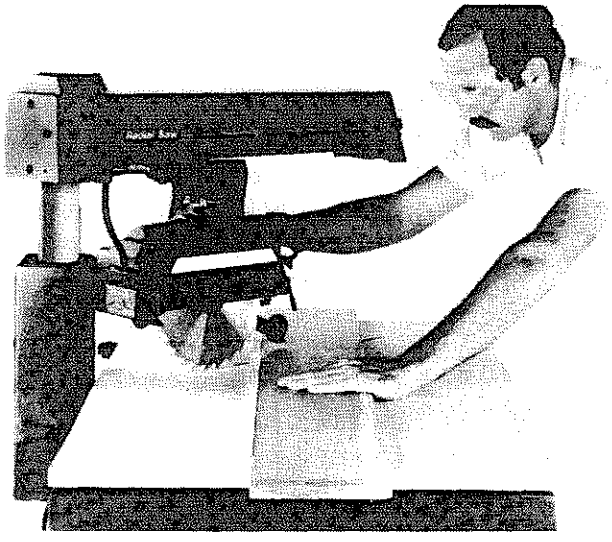

Fig. 82 - Miter Crosscut

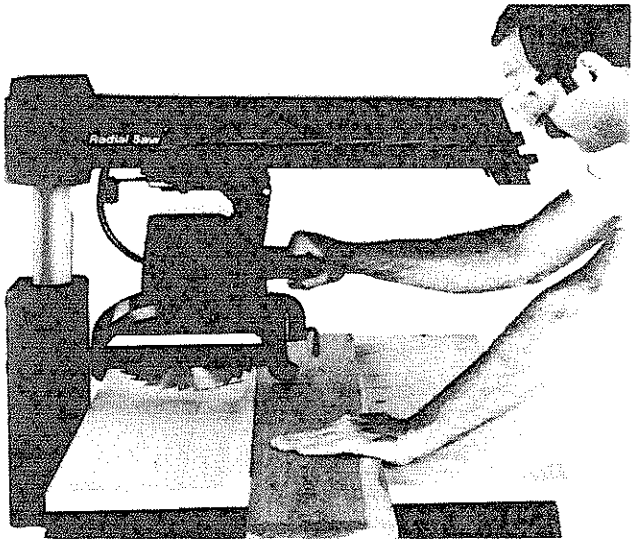

Fig. 83 - Bevel Crosscut

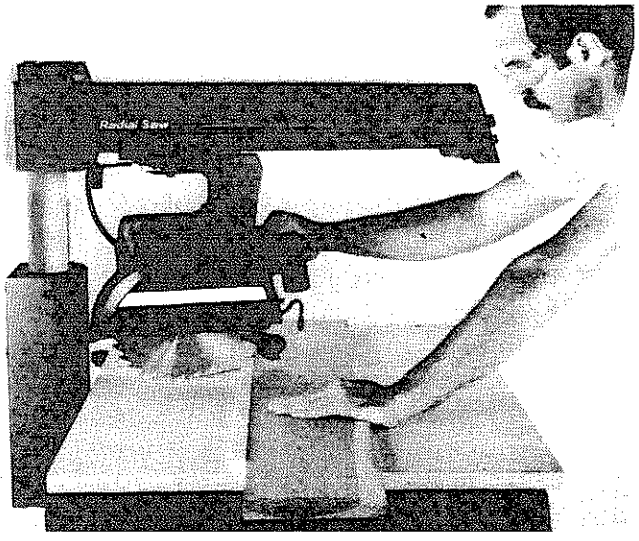

Fig. 84 - Compound Crosscut

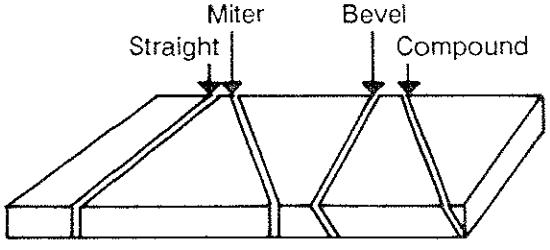

Fig. 85 - Basic Crosscut

Safety Information for Crosscutting

Read and follow the safety information below before making any type of crosscut.

⚠ WARNING

1. Set guard and anti-kickback pawls to proper height to serve as a partial barrier.

2. The saw blade can throw the workpiece over the fence if the blade is pushed backwards into workpiece.You or others can be hit and injured by the thrown workpiece. Start a crosscut with the blade in its rearmost position.

3. If the blade is pulled through the workpiece beyond the middle of the blade, it can:

- **pick up and throw the cut-off section of the workpiece which could hit and injure you or others in the area, or;**
- **lift or move the held-down section of the workpiece and pull your hand into the blade as the blade is returned. Pull the saw blade through the workpiece to the distance shown below.**

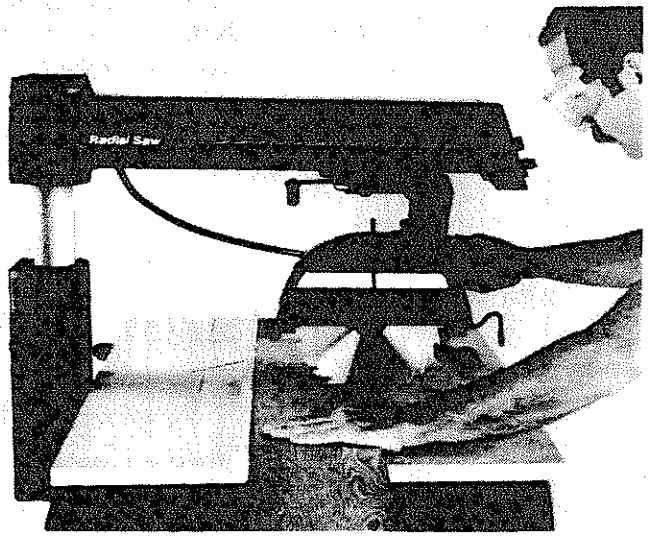

Fig. 86 Blade Distance to Complete Crosscut

4. Fingers or hand can slip into the saw blade as you make a crosscut. Fingers, hand or arm can be cut off. Keep the hand holding the workpiece at least 8 inches to the side of the workpiece, out of the path of the saw blade. Keep hand holding the workpiece in view at all times.

5. The blade can come completely off table edge beyond the 30° left miter position. Fingers, hands, arms or legs can be cut off. Use the right miter position whenever possible to make miter crosscuts.

6. The blade continues to turn for about 12 seconds after the saw is turned off. Wait for the blade to stop before reaching for the workpiece.

7. If length stops are used on the cut-off end of workpiece, the cut-off end can be thrown by the blade. The workpiece could hit and injure you or others in the area. Do not use a length stop on the cut-off end of the workpiece. Use a length stop only on the end of the workpiece which is held down.

8. Holding on to or touching the cut off end of the workpiece while the saw blade is still turning can cause the workpiece to pinch the blade. The workpiece can be thrown and hit and injure you or others in the area. Do not touch, hold on to, push, or grab the cut-off piece of the workpiece while the power is on or the saw blade is turning.

9. The saw can throw the workpiece, workpiece chips or pieces of the blade violently. You can be blinded. Wear safety goggles.

10. The workpiece cannot be controlled or held stable enough to do free hand cutting. The workpiece can be thrown or slip and pull fingers and hand into the saw blade. Fingers or hand can be cut off. Set the radial arm to the desired cutting angle. Keep workpiece flat on table and solidly against the fence.

11. Saw parts loosen and wear with use. You or others can be injured. Keep all parts tight and in working order.

12. The fence must be of at least equal height to the workpiece or else the workpiece can be lifted or thrown and hit and injure you or others in the area. See Cutting Accessories section for instructions to make a fence.

13. The blade will try to pull itself through the workpiece. Be prepared to hold the saw handle back to keep the saw blade from coming toward you.

14. Lock rip lock after every crosscut, or else the blade will suddenly come toward you when you lower it to make a crosscut.

15. Whenever the blade is turning, keep one hand on the saw handle to keep the saw blade from coming toward you.

16. Cutting more than one workpiece at a time can cause you to lose control of the workpieces, which can be thrown and hit and injure you or others in the area. Cut only one workpiece at a time. Do not stack or lay workpieces edge to edge.

Blade Guard, Anti-Kickback Pawls and Spreader

The blade guard, anti-kickback pawls and spreader are designed to reduce or eliminate the risk of injury from contact with the upper half of the blade and the leading edge of the blade when:

- the guard is in the horizontal position and;
- the pawls and spreader are set to clear the top of the fence and workpiece by about 1/8 inch.

The Blade Guard:

- provides protection from contact with the upper half of the blade;
- helps keep the workpiece from jamming in the guard and;
- helps catch or deflect workpiece chips or pieces of the blade.

The Anti-kickback Bar, Pawls and Spreader:

- serve as a partial barrier to provide protection from contact with the leading edge of the blade.

⚠ WARNING: To reduce the risk of contact with the upper half of the blade and keep the workpiece from jamming in the guard, set the blade guard in the horizontal position. Fig. 90.

Crosscutting Checklist

Use the following checklist at the beginning of each new cutting period to reduce the risk of an accident.

Crosscut Checklist

Yellow key removed from red switch.

Saw unplugged and switch off.

No play in the carriage bearings, motor support or column. See Alignment of the Blade section for instructions.

Arm slopes to the rear and table level side to side.

Arbor nut snug.

Blade sharp .

Fence secure, solid (knot free) and in good condition.

Fence in correct table position.

Workpiece does not extend above the top of the fence.

All saw parts are tight and working.

Saw blade in desired crosscut position and behind the fence.

Blade guard horizontal.

Anti-kickback pawls and spreader set to clear top of fence and/or workpiece by about 1/8 inch.

Swivel, rip, miter, bevel and table locks locked.

Read and follow instructions for the type of crosscut you want to do.

Cutting Table and Fence Kerfs

You will need to cut a new table kerf (shallow cut) and fence kerf (slot left in the fence from sawing through it with the blade), each time a new cutting angle is used. The table kerf lets the blade cut all the way through a workpiece.

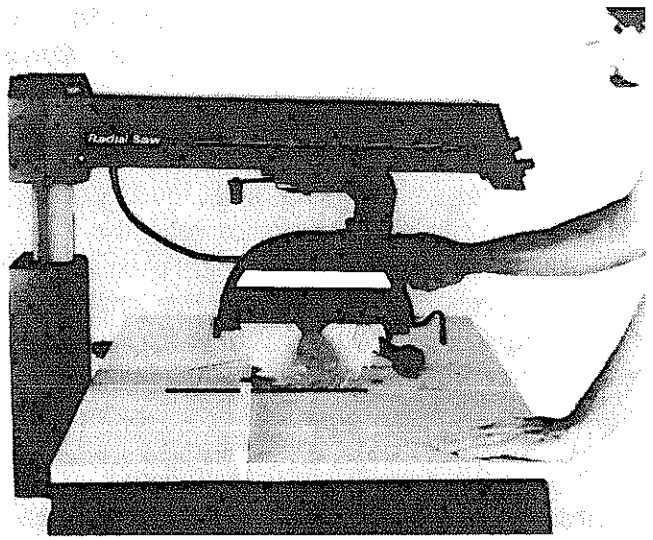

Fig. 87 Table and Fence Kerfs

Note: To extend the life of your table top, you can make an additional table top. See Helpful Hints section.

Making Table and Fence Kerfs for Crosscutting

To make a crosscut kerf in your table and fence:

1. Put your fence between the front table and spacer board. Lock the table locks.

2. Push the saw to the rearmost position, behind the fence.

3. Lock rip lock.

⚠ WARNING: The saw blade will suddenly come toward you when lowered into the table if the rip lock is unlocked. Fingers and hand can be cut off. Lock the rip lock before and after each crosscut.

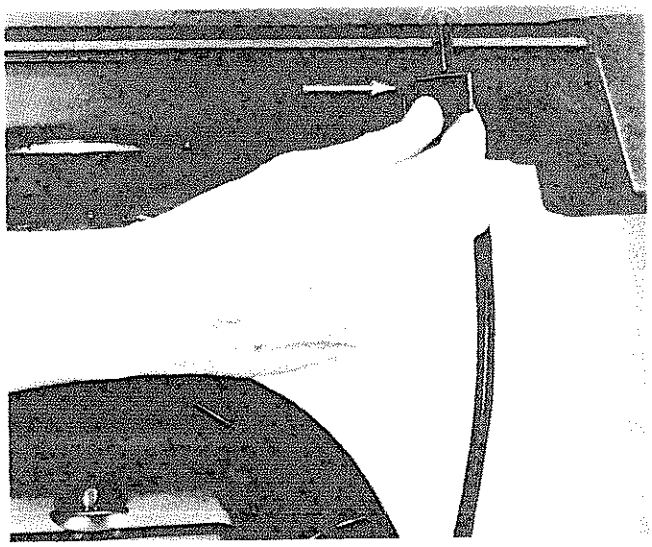

Fig. 88 Locked Position for Rip Lock

4. Lower the radial arm until the blade almost touches the table top.

5. Plug the saw into a grounded outlet. Check Electrical Connections section of manual if you are not sure the outlet is grounded.

6. Wear safety goggles labeled CSA Z94.3-1969 on the package.

⚠ WARNING: The saw can throw the workpiece, workpiece chips or pieces of the blade violently. You can be blinded. Wear safety goggles.

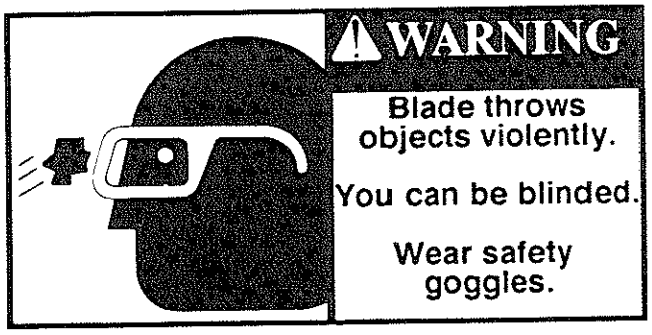

Fig. 89 - Safety Goggles Safety Sign

7. Insert yellow key into the red switch.

8. Grasp saw handle and hold your forearm in line with the saw handle as shown below.

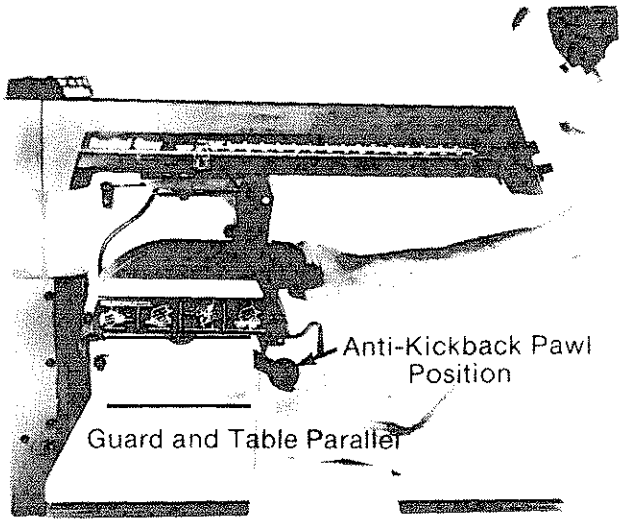

Fig. 90 - Crosscut Blade Guard and Body Position

⚠ WARNING: Saw blade can suddenly come toward you when turned on. Fingers, hand or arm can be cut off. Keep one hand on the saw handle at all times.

9. Turn the saw on.

10. Lower the saw arm slowly until the blade touches the table.

11. Turn the handwheel another 1/2 turn more. This will let you make a 1/32 to 1/16 inch kerf in the table.

12. Unlock rip lock.

13. Pull the saw blade forward through the fence and along the table as far as it will go.

14. Return the saw blade to its rearmost position behind the fence.

15. Turn the saw off, but do not let go of the saw handle.

16. Wait for blade to stop turning.

17. Lock rip lock.

18. Remove yellow key from red switch.

Making Crosscuts

The following section contains safety information and instructions for making crosscuts. Anyone who uses your saw should read and follow these steps.

⚠ WARNING: The blade guard must be horizontal to provide protection from contact with the upper half of the blade and avoid the workpiece being jammed in the blade. Set the blade guard in the horizontal position. Fig. 90.

⚠ DANGER: The anti-kickback pawls serve as a barrier for the leading edge or the blade. Set the anti-kickback pawls to clear the top of the fence and workpiece by about 1/8 inch.

⚠ WARNING: The fence must be at least equal height or higher than the workpiece you are going to cut or else the workpiece can be thrown and injure you or others in the area. Install a fence of at least equal height to the workpiece.

1. Put your fence in position A as shown and lock the table locks.

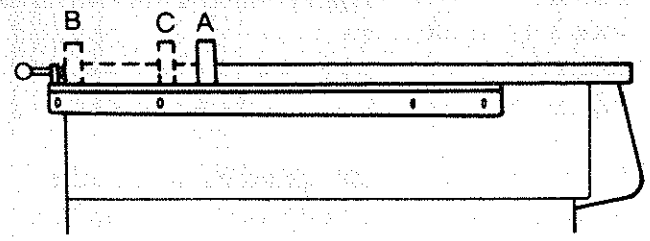

Fig. 91 Fence Position for Crosscut

2. Push the saw to the rearmost position, behind the fence.

3. Lower the blade into but not touching the table kerf.

4. Adjust the height of the anti-kickback pawls to clear top of fence and workpiece by about 1/8 inch. The pawls and spreader help provide protection from the leading edge of blade.

5. Plug saw into grounded outlet.

6. Put on safety goggles.

7. Place the workpiece against the fence.

8. Unlock rip lock.

9. Grasp the saw handle while holding your forearm in a straight line with the saw handle.

⚠ WARNING: The saw blade tries to pull itself through the workpiece. Be prepared to hold saw handle back to keep the saw blade from coming toward you. Keep one hand on the saw handle at all times.

⚠ WARNING: If the saw blade is pulled through the workpiece beyond the middle of the saw blade, it can:

- **pick up and throw the cut-off section of the workpiece which could hit and injure you or others in the area, or;**
- **lift or move the held-down section of the workpiece and draw your hand into the blade as the blade is returned.**

Pull the saw blade through the workpiece to the distance shown below.

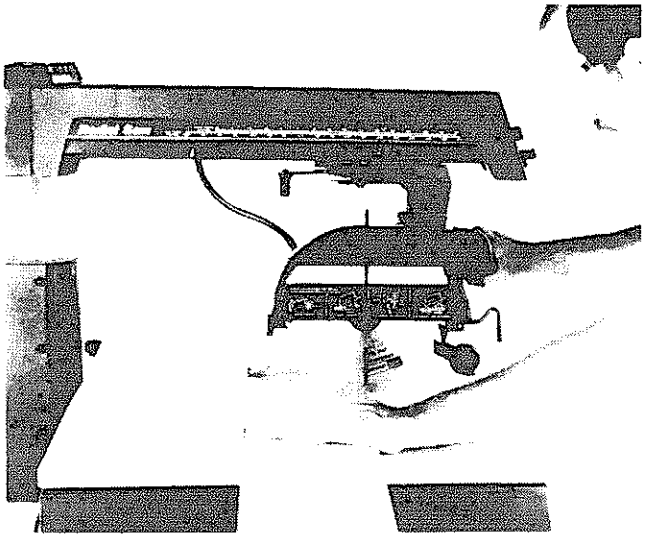

Fig. 92 Distance Needed to Complete Crosscut

10. Insert yellow key into red switch.

11. Turn saw on.

⚠ WARNING: Saw blade can be pulled into or over fingers or hand. Fingers or hand can be cut off. Keep hand holding the workpiece at least 8 inches to the left of, and out of the path of the saw blade. Keep hand in view at all times.

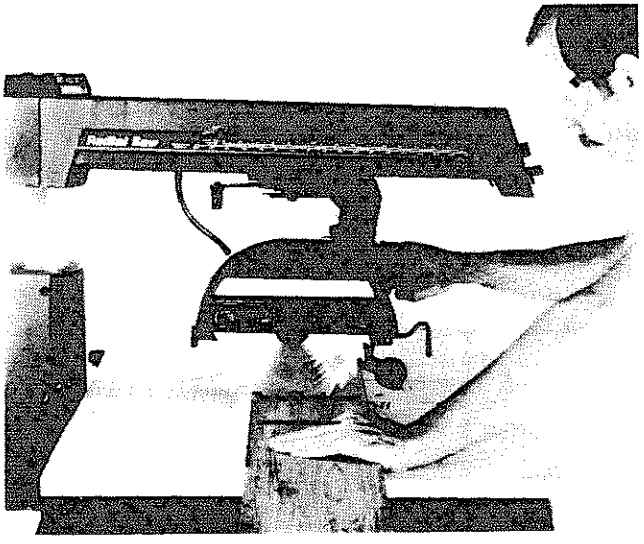

Fig. 93 Hand Placement for Crosscuts

12. Support and hold the workpiece down and against the fence firmly with your left hand.

13. Pull blade through fence and workpiece just enough to complete the cut. Fig 92.

14. Return saw to its rearmost position and continue to hold the saw handle.

15. Turn saw off.

16. Wait for the blade to stop turning.

17. Remove yellow key form red switch.

Repetitive Crosscuts

To make repetitive crosscuts:

1. Use two pieces of 1 inch by 2 by 2 inch lumber.

2. Use a C clamp to clamp one piece on each side of the lower right edge of the radial arm.

3. Clamp pieces of lumber at the distance necessary to complete the crosscut.

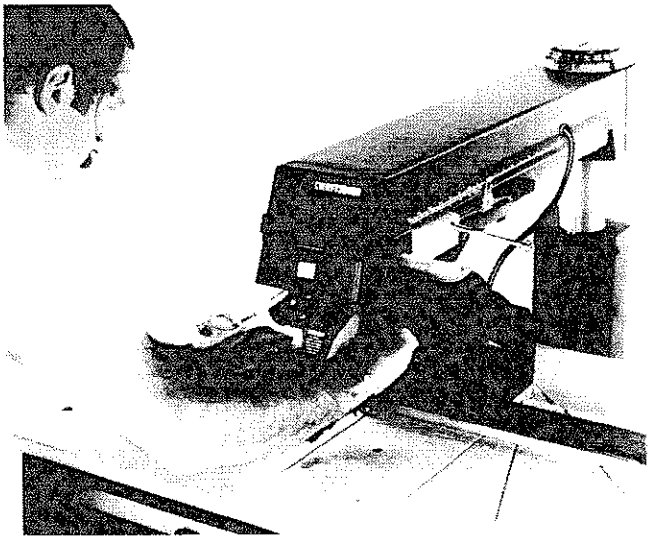

Fig. 95

Ripping

Ripping is used to change the width of the workpiece by sawing along its length. The workpiece is fed into the saw blade. The fence is used as a guide. Rip cuts are usually made with the grain of the workpiece.

Saw Positions for Ripping

There are two saw blade positions for making rip cuts: in-rip and out-rip.
In in-rip position, motor is toward the front of the table, and blade is toward the fence.

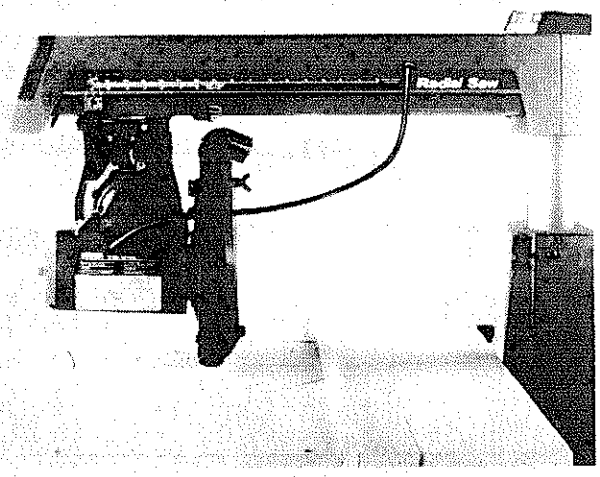

Fig. 96 In-Rip Saw Position

In out-rip position, motor is toward fence and the blade is toward the front of the table.

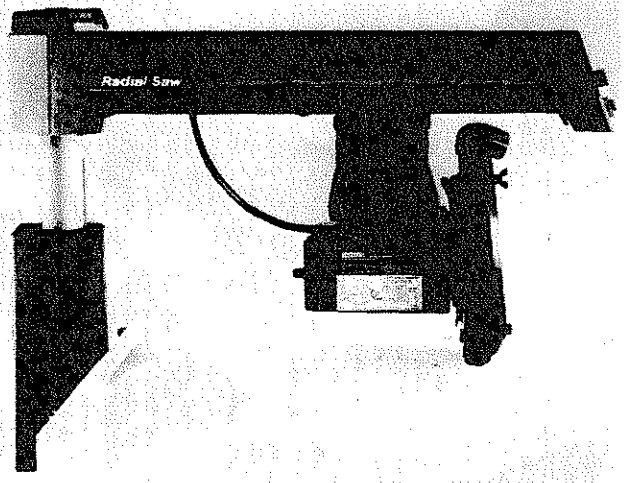

Fig. 97 Out-Rip Saw Position (Infeed End)

⚠ WARNING: Stand only at infeed end of saw. Feed workpiece only into infeed end of saw as shown above.

When to Use In-Rip or Out-Rip

The in-rip saw position provides better visibility of both the workpiece and your hands than does the out-rip saw position. The only time you should use the out-rip saw position is when the workpiece is 14 inches or wider. Use the in-rip position for all workpieces less than 14 inches wide.

Workpiece Positioning for Ripping

Always set up the saw blade so the widest part of the workpiece is between the blade and the fence. For example, if you want to take 1 inch off an 11 inch wide workpiece, set the saw blade 10 inches from the fence. Do not rip 1 inch off an 11 inch workpiece by setting the saw blade 1 inch from the fence.

⚠ WARNING: If the blade is set between 2 inches and 6 inches from the fence, hands will be brought too close to the blade. Fingers and hand can be cut off. Use a push stick.

For example, if the workpiece is 7 inches wide and you want to cut 1 inch off the workpiece, place the saw blade 6 inches from the fence and use a push stick. Use a push stick when the distance between the saw blade and fence is between 2 inches and 6 inches. See Cutting Accessories section on how to make and use a push stick.

⚠ WARNING: If the blade is set between 1/2 inch and 2 inches from the fence, hands will be brought too close to the blade. Fingers/hand can be cut off. Use an auxiliary fence/push block.

For example, if the workpiece is 3 inches wide and you want to cut 1 inch off the workpiece, place the saw blade 2 inches from the fence and use a push block and auxiliary fence. See Cutting Accessories section.

Safety Information for Ripping

Read and follow the safety information below before making any type of rip cut.

⚠ DANGER

1. Kickback can happen when the saw blade is pinched or bound by the workpiece. This creates force in the opposite direction to which the workpiece is being fed. The teeth of the blade grab and throw the workpiece violently back out of the saw.

Kickback can happen when:

Anti-kickback pawls/spreader are not used or not correctly adjusted.

Spreader is not in line with the blade.

Blade is not parallel to the rip fence.

Edge of workpiece is not in contact with the rip fence or not straight.

Workpiece is twisted or warped and rocks on the table top.

Edge of workpiece is not completely against the rip fence, leaving gaps between the fence and workpiece edge.

Workpiece is released before being pushed completely past the saw blade.

Feeding pressure is put on the section of the workpiece farthest from the fence.

2. One of the most common and the most dangerous mistakes people make is to reach for the workpiece at the outfeed side of the saw. DON'T ! The workpiece could kickback as you reach for, touch or try to pull the workpiece through the blade. You can lose your fingers, hand, or arm. The blade guard does NOT provide complete protection at outfeed end of the saw. Do not reach for the workpiece at outfeed end of the saw. Fingers, hand or arm can be cut off. Follow instructions for ripping.

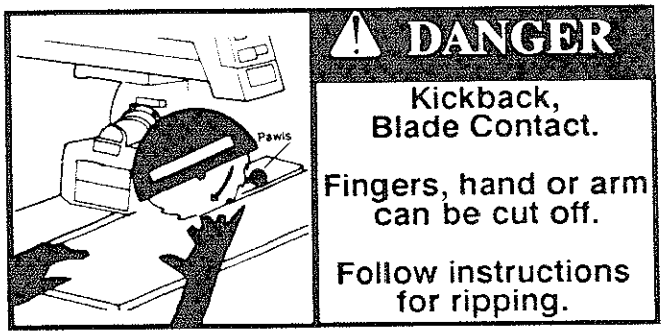

Fig. 98 Kickback, Blade Contact Safety Sign

3. The workpiece can also kickback violently toward you during a rip cut. You can be hit hard enough to cause broken bones and/or internal injury. Keep blade guard, anti-kickback pawls and spreader in place and adjusted. Apply feed pressure to the section of the workpiece next to the fence. Do not apply feed pressure on the section of the workpiece away from the fence. Stand out of the path of the workpiece.

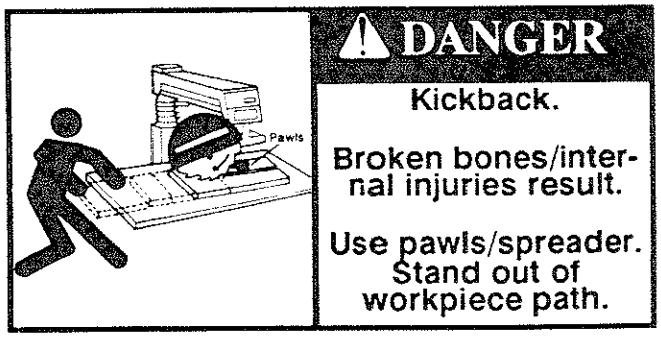

Fig. 99 Kickback, Thrown Workpiece Safety Sign

4. Non-thru cuts increase the chance of kickback because the anti-kickback pawls cannot always grab the irregular workpiece surface. Use a featherboard. See Cutting Accessories section on how to make and use a featherboard.

5. The workpiece can snag or hang up on a fence with a kerf in it. The workpiece can be thrown or pinch the blade, causing kickback. Use solid fences when making rip cuts.

6. Wood cut with the grain can spring the kerf closed, bind the blade, and cause a kickback. Adjust spreader to ride in the kerf and prevent the kerf from closing on saw blade.

7. Composition materials, like particle boards and plastics, may be cut on the saw. Because these materials often have a harder and more slippery surface than wood, the anti-kickback pawls may not stop a kickback. Place finished side of workpiece down, roughest side of workpiece up. Make anti-kickback pawls and spreader adjustments. Stand out of the path of workpiece.

⚠ DANGER: Wrong Way Feed

Wrong way feed is feeding the workpiece into the end of the blade with pawls, the outfeed end. (Fig. 101) There are two things that can happen if you feed the workpiece into the outfeed end of the saw blade:

1. The workpiece can be grabbed by the blade and pull your hands into the blade before you can let go or pull back. Fingers, hands or arms can be cut off.

2. The workpiece can be grabbed by the saw blade and take off like a missile. Anyone standing in the path of the workpiece can be killed.

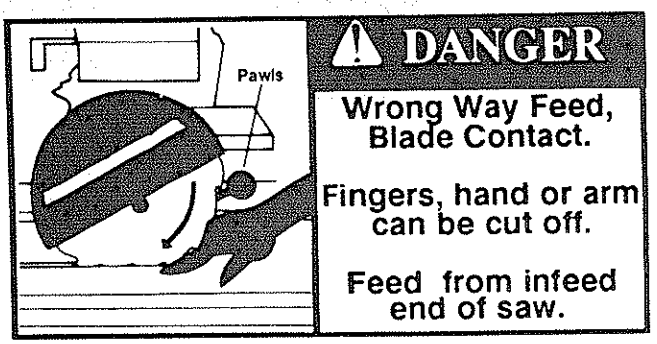

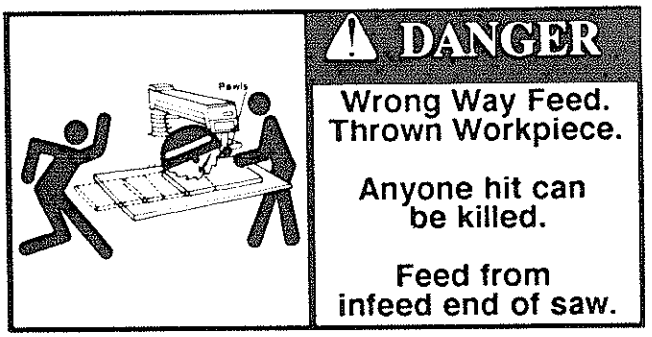

Fig. 100 Wrong Way Feed Safety Signs

Always feed the workpiece against the direction of rotation of the blade, at the infeed end of the blade.

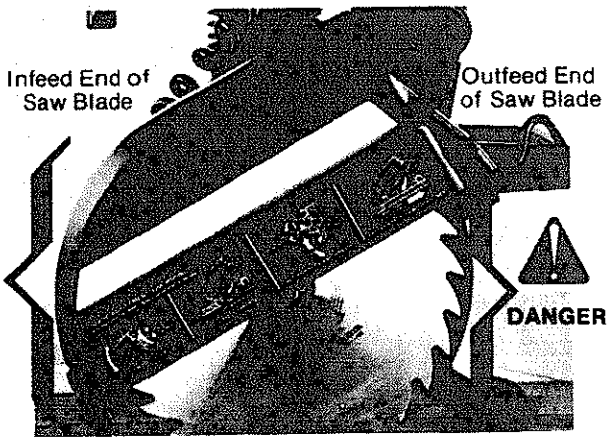

Fig. 101 Infeed and Outfeed Ends of Saw Blade

Blade Guard, Anti-kickback Pawls and Spreader

The blade guard, anti-kickback pawls and workpiece spreader are designed to reduce or eliminate the risk of injury from blade contact, workpiece kickback and wrong way feed.

The Blade Guard:

- serves as a partial barrier to help keep hands from contacting the blade at the infeed end of the saw blade.
- helps keep the workpiece from lifting or fluttering during ripping.
- helps catch or deflect workpiece chips or pieces of the blade.

The Anti-Kickback Pawls :

- help reduce kickback by grabbing into and holding the workpiece.
- act as a barrier to provide some protection from blade contact.

The Spreader:

- helps keep the kerf of the workpiece open, which helps prevent the blade from being pinched and causing workpiece kickback.
- when correctly set, helps reduce or eliminate the chance of wrong way feed because it blocks the workpiece from contacting the saw blade.

⚠ WARNING: The anti-kickback pawls and spreader adjustments must be made each time a different thickness workpiece is cut to reduce or eliminate kickback.

Rip Cutting Checklist

Use the following rip cutting checklist at the beginning of each new cutting period to reduce the risk of an accident.

Rip Cutting Checklist

Yellow key removed from switch.

Saw unplugged and switch off.

No play in the carriage, yoke or column.

Arm slopes to the rear and table level side to side.

Arbor nut snug.

Blade sharp.

Fence secure, solid (knot free), no kerfs.

Fence in correct rip position.

Saw blade desired distance from the fence for cut.

Swivel, bevel, rip, miter and table locks locked.

Blade guard, anti-kickback pawls and spreader adjusted.

Use push stick if cutting between 2 and 6 inches off workpiece.

Use push block if cutting between 1/2 and 2 inches off workpiece.

Use featherboard if making a non-through cut and when needed on through cuts.

Read and follow instructions for the type of rip cut you want to make.

Making a Rip Cut Table Kerf

You will need to make a table kerf before a rip cut can be made. Every time you move the blade a new distance from the fence, you will need to make a new kerf.

1. Put saw in desired rip position and lock the saw arm in the 0° position.

2. Lock rip, swivel, miter, bevel and table locks.

3. Adjust saw arm with handwheel until the saw blade almost touches the table top.

4. Plug the saw into a grounded outlet.

5. Put on safety goggles.

6. Insert the yellow key in the red switch.

7. Turn saw on.

8. Lower saw blade until blade touches the table.

9. Turn the handwheel about 1 full turn more. This will make a 1/16 to 1/8 inch kerf in the table.

⚠ WARNING: For workpieces 1/4 inch thick or less, make the rip kerf at least 1/8 inch deep to keep the saw blade from rising up on top of workpieces and violently throwing them.

10. Turn saw off and remove yellow key.

11. Unplug saw at the end of cutting session.

Adjustments for Ripping

⚠ DANGER: You will need to make blade guard, anti-kickback pawls and spreader adjustments before making a rip cut.

Blade Guard Adjustments

1. Unplug saw and remove yellow key.

2. Put saw in In-Rip position and lock the saw arm in the 0° position.

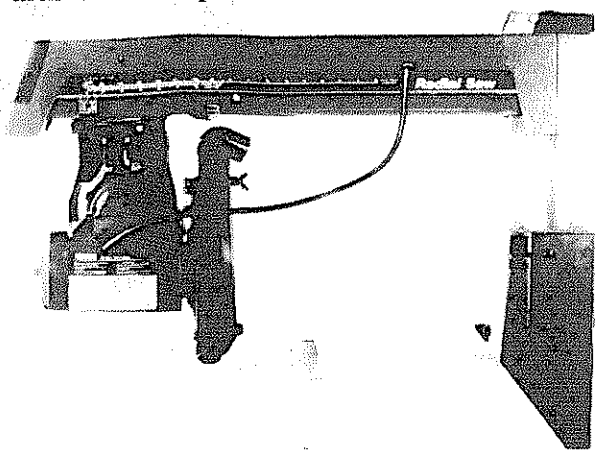

Fig. 102 In-Rip Saw Position

3. Lock rip, miter, bevel, swivel and table locks.

4. Go to the in-feed end of the saw blade. Fig. 101.

5. Put the workpiece on the table, in line with blade and under the nose of blade guard, so it touches the blade.

6. Loosen the guard clamp screw and rotate the guard until the guard nose just clears the workpiece. Fig. 103.

7. Tighten the guard clamp screw.

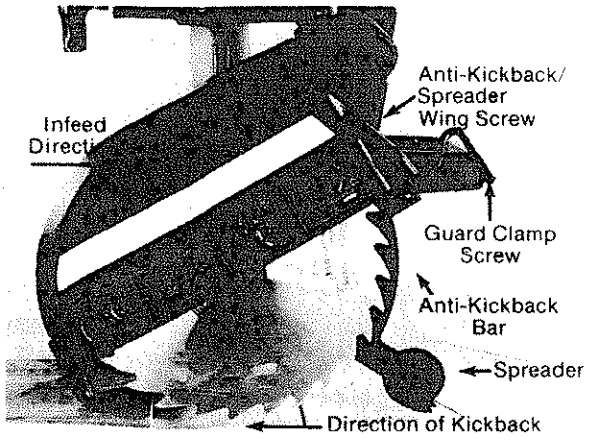

Fig. 103 Blade Guard Position for Ripping

Anti-kickback Pawls and Spreader Adjustments

1. Go to the outfeed end of the saw blade.

2. Put edge of workpiece beside the blade and under the pawls.

3. Loosen wing screw and lower the anti-kickback pawls and spreader until the spreader hangs next to the edge of the workpiece and the pawls, on one side of the spreader, rest on the workpiece.

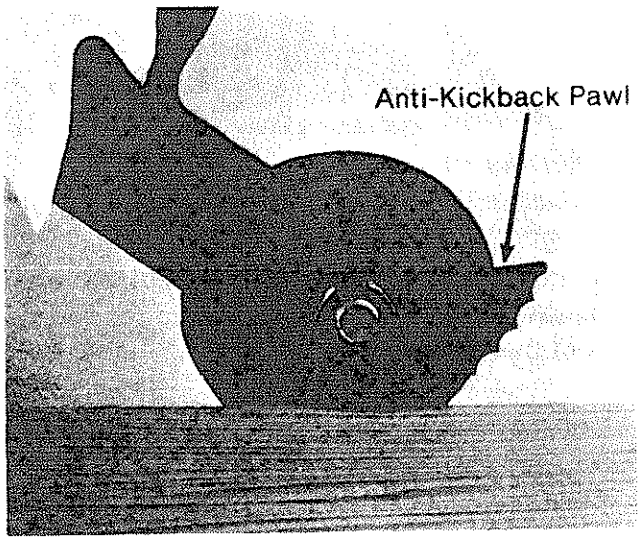

Fig. 104 Anti-kickback Pawl Position

4. Tighten wing screw.

5. Go to the infeed end of the saw blade.

6. Push the workpiece a few inches in the direction of the cut and then pull the workpiece back toward you. The pawls should have grabbed the wood and stopped the kickback motion by grabbing into the workpiece. If they did not, repeat adjustments until the pawls grab the workpiece. If the pawls fail to grab the workpiece, sharpen or replace them. If that fails to work, use a featherboard. Repeat steps for making anti-kickback pawls and spreader adjustments above.

Making Rip Cuts

When to Use In-Rip or Out-Rip

The in-rip saw position provides better visibility of both the workpiece and your hands than does the out-rip saw position. The only time you should use the out-rip saw position is when the workpiece is 14 inches or wider. Use the in-rip position for all workpieces less than 14 inches wide.

Workpiece Positioning for Ripping

Always set up the saw blade so the widest part of the workpiece is between the blade and the fence. For example, if you want to take 1 inch off an 11 inch wide workpiece, set the saw blade 10 inches from the fence. Do not rip 1 inch off an 11 inch workpiece by setting the saw blade 1 inch from the fence.

⚠ WARNING: If the blade is set between 2 inches and 6 inches from the fence, hands will be brought too close to the blade. Fingers and hand can be cut off. Use a push stick.

For example, if the workpiece is 7 inches wide and you want to cut 1 inch off the workpiece, place the saw blade 6 inches from the fence and use a push stick. Use a push stick when the distance between the saw blade and fence is between 2 inches and 6 inches. See Cutting Accessories section on how to make and use a push stick.

⚠ WARNING: If the blade is set between 1/2 inch and 2 inches from the fence, hands will be brought too close to the blade. Fingers/hand can be cut off. Use an auxiliary fence/push block.

For example, if the workpiece is 3 inches wide and you want to cut 1 inch off the workpiece, place the saw blade 2 inches from the fence and use a push block and auxiliary fence. See Cutting Accessories section.

⚠ WARNING: When making through rip cuts do not set the blade closer than 1/2 inch from the fence or auxiliary fence, your hands will be brought too close to the blade. Your fingers and hand can be cut off. Do not use a radial arm saw to rip cut less than 1/2 inch wide workpieces.

1. Set the blade to desired distance from the fence and lock the saw arm in the 0° position.

2. Lock rip, swivel, miter, bevel and table locks.

3. Make blade guard, anti-kickback pawls and spreader adjustments.

4. Remove workpiece from table.

5. Turn saw on.

6. Place workpiece under the guard nose, keeping workpiece edge against the fence.

7. Place one hand flat on the workpiece and next to fence.

8. Place the other hand behind the first so that your fingers are:

- on the back edge of workpiece;
- out of the blade path and,
- as close to the fence as possible.

⚠ WARNING: Even when all steps to reduce kickback are taken, the workpiece can still kickback. You or others in the area can be hit hard enough to cause broken bones or internal organ injury. Stand out of the line of the saw blade and workpiece.

9. Stand out of the line of the workpiece to be clear of workpiece in case of kickback.

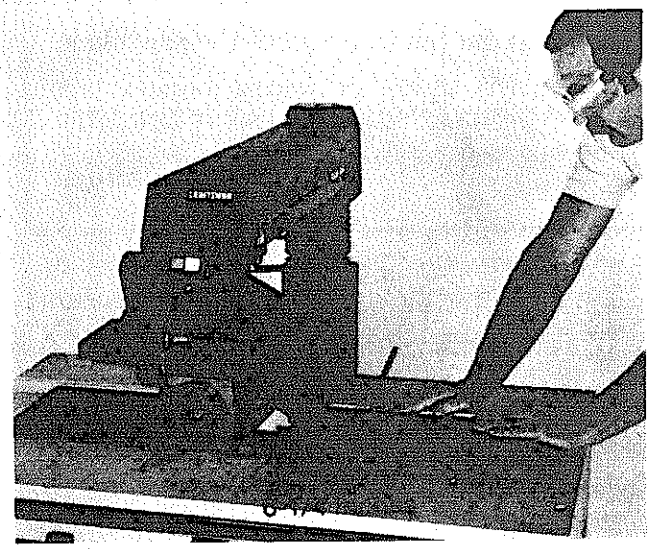

Fig. 105 Hand and Body Position for Making an In-Rip Cut

10. Position your body at the infeed end of the saw blade. Start and complete the cut from that same side.

11. Push the workpiece, putting pressure on the part of the workpiece between the blade and the fence. If you push the part of the workpiece on the other side of the blade, the blade could be pinched and the workpiece **will** kickback.

12. Keep pushing the section of the workpiece between the blade and the fence until the piece has been pushed completely past the anti-kickback pawls.

⚠ DANGER: The blade guard does NOT provide complete protection at outfeed end of the saw blade. The workpiece could kickback as you reach for, touch or pull the workpiece through the blade, pulling your hand into the blade. Fingers, hand, or arm can be cut off. Do not pull, hold-down or touch the workpiece at the outfeed end of the saw.

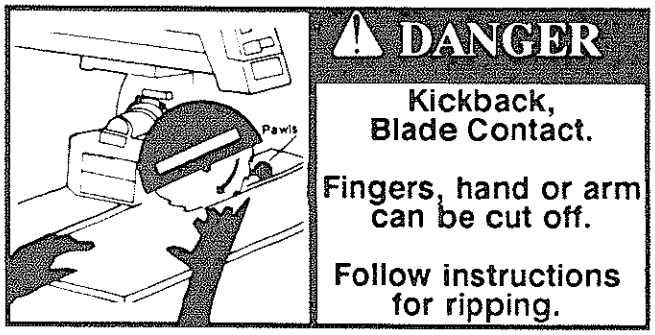

Fig. 106 Kickback, Blade Contact Safety Sign

13. Turn the saw off

⚠ WARNING: Blade continues to turn for about 12 seconds after power is turned off. Do not reach for cut workpiece until blade stops. Fingers or hand can be cut off by the turning blade. Wait for blade to stop turning.

14. Remove yellow key from red switch.

Bevel Ripping

To make a bevel rip cut:

1. Set the saw in the desired position.

2. Index the arm to 0° and lock in position.

3. Bevel the blade to the desired angle.

4. Follow steps for making a rip cut.

Note: For dadoing, molding and edging, follow instructions for crosscutting.

Dadoing

1. Instructions for using dado blades are provided with the dado blade.

2. The saw arbor is designed for a dado set up to 13/16 inches wide. Use of a wider dado on the arbor could cause the dado and arbor nut to spin off. Take several passes of the dado if cut required is greater than 13/16 of an inch wide.

3. To avoid excessive load on the motor never cut a 13/16 inch wide dado deeper than 1/8 inch in one pass.

4. When installing the dado on the arbor, always install the inside loose collar first to ensure good arbor nut engagement. Make sure the arbor nut is snug. Install the arbor nut directly against the outside of the dado.

Molding

1. Instructions for using the molding head are provided with the molding head.

2. Use of molding head or drum sander with the saw arbor vertical requires an opening (next to rear face of fence) for saw arbor clearance. See Cutting Accessories section to make a molding fence.

Edging

1. Edging requires the use of a dado or molding head in the horizontal position (parallel to table).

2. Use proper accessory guard when edging. See Recommended Accessories section.

⚠ WARNING: Using the saw without the proper accessory guard for edging is extremely dangerous. Hands, fingers or arm can be cut off. Buy, use and follow instructions for edging guard.

3. Use an auxiliary fence when edging with the radial arm in the 0° miter position. See Cutting Accessories section to make auxiliary fence for edging in the 0° miter position.

⚠ WARNING: If the auxiliary fence is not used when the saw arm is in the 0° crosscut position, the molding head cannot be located behind the fence for safe and proper operation.

4. Edging can also be done in the 30° left miter without the use of an auxiliary fence. Follow the instructions below.

- Miter the arm to the left approximately 30°.
- Swivel the motor until bottom of motor is parallel to and facing the rip fence and operating instructions label is visible.
- Follow all steps outlined on motor label as shown below.

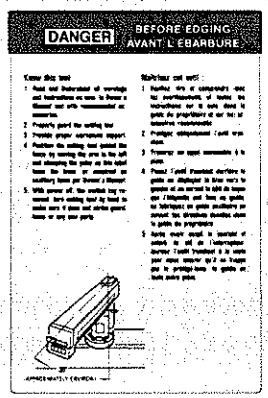

Fig. 107 Edging Label

Accessory Safety

1. For your safety use only recommended accessories. Use of any other accessories may increase the risk of injury.

2. Use of grinding wheels, abrasive or cut off wheels, or wire wheels is dangerous because they can break explosively and throw pieces. You can be blinded or recieve a life threatening puncture wound. Do not use grinding wheels, abrasive/cut off wheels or wire wheels.

3. Remove saw blade, dado, or other accessory from the saw arbor shaft before using the accessory shaft. Do not use the saw with accessories installed on both ends of the saw arbor shaft at the same time.

4. Make sure the unused shaft is covered by a guard, the arm, or the screw cap to avoid being pulled into moving parts by hair, threads, clothing.

5. Drill chucks can bend and pieces of the drill bit can break. You can be blinded or injured if hit by thrown pieces. Do not use twist drills longer than 7 inches.

6. Use a spade type drill of 1 inch diameter or smaller. Use for drilling only wood or plastic because the speed is not high enough for other types of materials.

7. Do not use other reduced shank drills.

8. Remove adjusting wrenches. Form habit of checking to see that adjusting wrenches are removed from tool before turning it on.

9. When using the accessory shaft in the vertical position, swivel the motor 90° so that the arbor shaft is under the radial arm as shown.

⚠ WARNING: Clothing, hair, jewelry can be caught and pulled into an exposed arbor shaft. Fingers, hand or arm can be broken or cut off. Place the arbor shaft under the radial arm when using the accessory shaft.

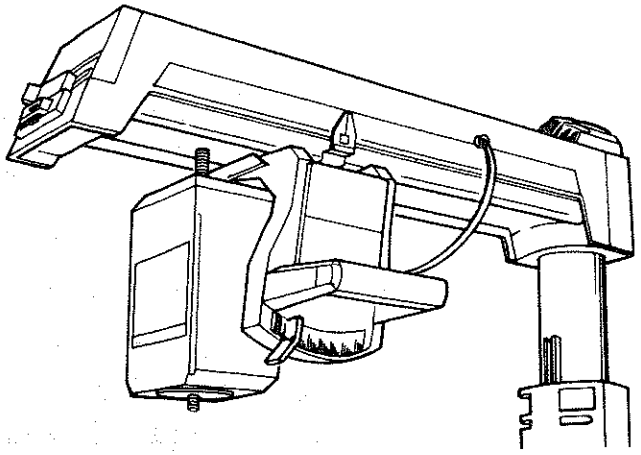

Fig. 108 Arbor Shaft Position When Using Accessory Shaft

Fences

Fences are required for all saw operations.

Crosscutting requires fences with kerfs (slots) to match the path of the saw, because the saw blade is pulled through the kerf in the fence to cut the workpiece.

Ripping requires a solid fence with no kerfs or slots, because the fence serves as a guide for the workpiece being pushed into the saw blade. If the workpiece is pushed along a fence with kerfs, the workpiece can get caught on a kerf, pinch the blade and cause the workpiece to kickback.

Make a new fence:

- when the fence used for crosscutting has weakened from having too many kerfs cut in it;
- when you want to make a rip cut but the fence on the saw has kerfs;
- when you want to crosscut a workpiece higher than your current fence.

To make a new fence:

1. Use 3/4 inch knot free lumber. Do not use particle board or other composite material because they are not strong enough.

2. Cut lumber to a length equal to the length of the table, and to a width equal to the height of the workpiece plus one inch. The installed fence must be equal to or higher than the workpiece.

Push Stick

Push sticks are used during ripping when the blade is placed between 2 and 6 inches from the fence.

Make a push stick when:

- the blade is to be placed 2 to 6 inches from the fence;
- existing push stick has been damaged.

To make a push stick:

1. Use 3/4 inch solid (knot free) piece of lumber.

2. Cut a piece 15 inches long by 1 5/8 inches wide.

3. Cut a 45 degree notch in one end as shown.

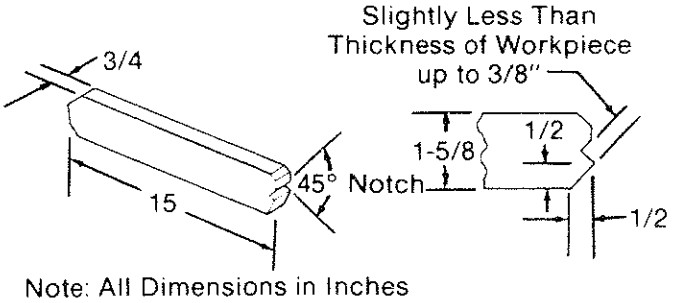

Fig. 109 Push Stick Dimensions

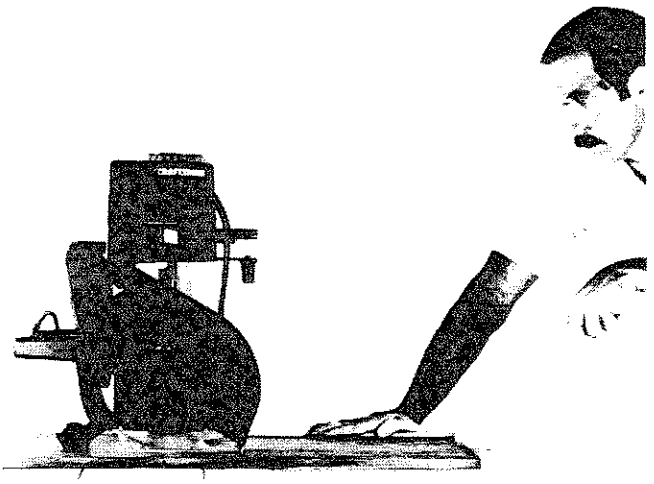

Fig. 110 Way to Use Push Stick

Auxiliary Fence and Push Block

An auxiliary fence must be used if the blade is positioned between 1/2 inch and 2 inches from the fence during ripping. An auxiliary fence must always be used with a push block. Their purpose is to keep your hands away from the saw blade. They are also needed when you use the molding head.

Make an auxiliary fence when:

- the blade is to be placed 2 inches or less from the fence;
- an existing auxiliary fence is not the same width all along its length;
- the existing auxiliary fence has been damaged by blade contact.

To make auxiliary fence:

1. Use one piece of 3/8 inch plywood and two pieces of 3/4 inch plywood.

2. Cut the 3/8 inch plywood to 40 inches long by 5 1/2 inches wide.

3. Cut one piece of 3/4 inch plywood to 40 inches long by 3 5/8 inches wide.

4. Cut other piece of 3/4 inch plywood to 40 inches long by 2 1/4 inches wide.

5. Glue the two 3/4 inch plywood pieces together so that they line up square (flush) on an edge.

6. Glue the 3/8 inch plywood piece at right angle to and flush against the 2 1/4 inch wide 3/4 inch plywood.

7. Reinforce with nails.

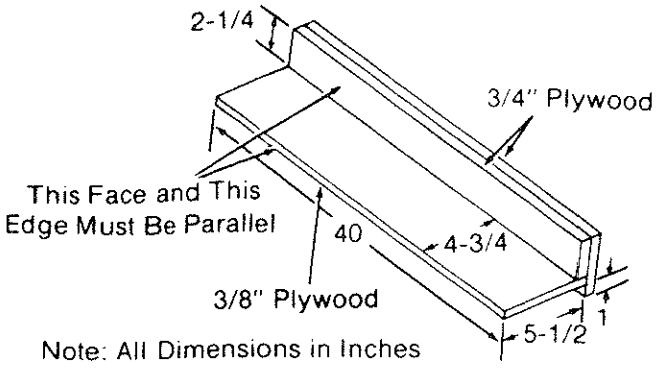

Fig. 111 Auxiliary Fence Dimensions

Push Block

Push blocks are always used with an auxiliary fence.

Make a push block when:

- the blade is to be placed 1/2 inch to 2 inches from the fence;
- you make the first auxiliary fence;
- existing push block has been damaged.

To make a push block:

1. Use one piece of 3/4 inch plywood and one piece of 3/8 inch plywood.

2. Cut the 3/4 inch plywood to 12 inches long by 5 inches wide.

3. Cut a triangular piece off each of two corners of the 12 inch side by marking with a pencil in and down from the corners 1 1/4 inches and cutting along the diagonal formed by the points.

4. Cut the 3/8 inch plywood to 12 inches long by 5 1/8 inches wide.

5. Cut out a notch from the 12 inch side of the 3/8 plywood that is 9 1/2 inches long by 3/8 inch wide. The dimensions of the remaining 3/8 plywood are shown in Fig. 165.

6. Glue the 3/4 inch plywood on top of the 3/8 inch plywood so that their 12 inch sides are square, as shown;

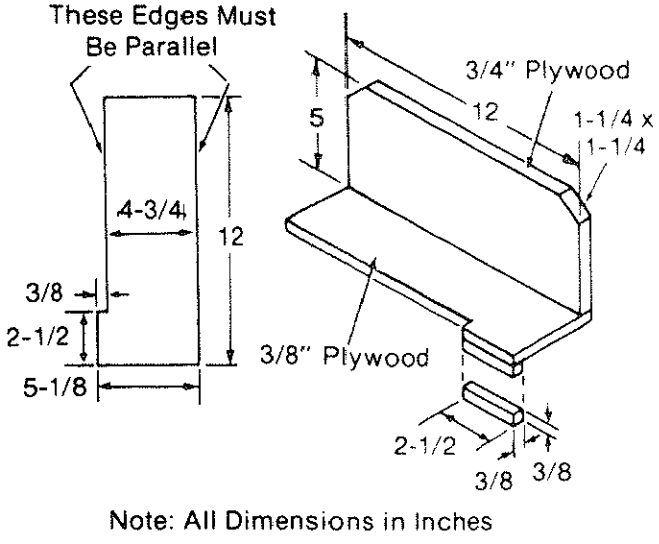

Fig. 112 Push Block Dimensions

7. Cut a piece of plywood 3/8 inch wide by 2 1/2 inches long and glue it to the underside of the 3/8 inch plywood in line with the edge that sticks out. Do not use nails because if you accidently cut into the push block with the saw blade, the nails will dull the blade.

8. Lay the push block on top of the auxiliary fence to make sure that their widths match exactly, and are each 4 3/4 inches.

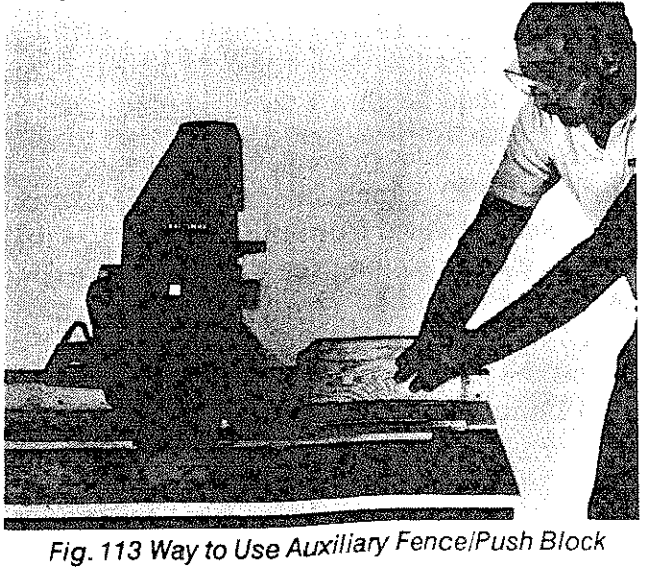

Fig. 113 Way to Use Auxiliary Fence/Push Block

Auxiliary Fence for Edging

Make an auxiliary fence for edging:

- before doing edging with the arm at 0° miter position.
- when existing ones have been damaged.

To make a fence for edging:

1. Use 3/4 inch solid (knot-free) lumber.
2. Cut to the dimensions shown.

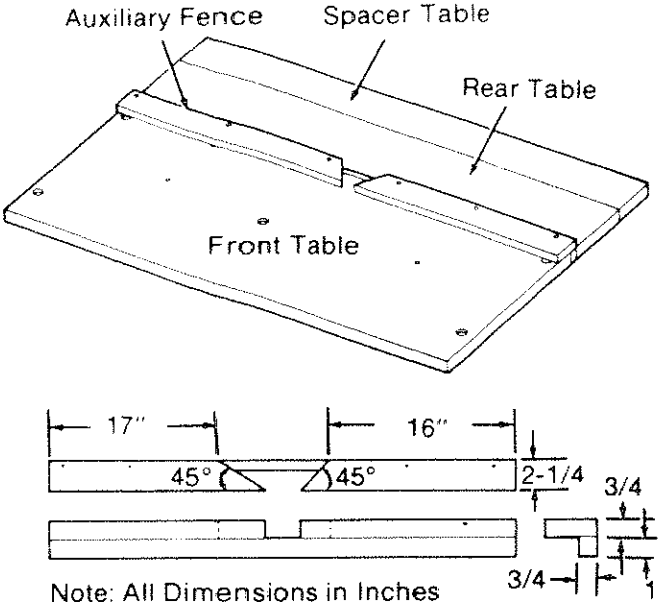

Fig. 114 Auxiliary Fence for Edging

For use of the molding head or drum sander with saw arbor vertical, the rear table requires an opening (next to rear face of fence) for arbor clearance. Cut opening directly below arbor in vertical position. Opening dimensions are shown below.

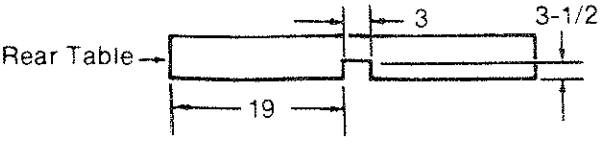

Note: All Dimensions in Inches

Fig. 115 Rear Table Opening Dimensions

Featherboard

Featherboards are used during rip cutting to help keep the workpiece against the fence. The featherboard is clamped to the front table, so that the angled edge of the featherboard is against the workpiece on the infeed end of the blade. The other edge of the workpiece is against the fence.

Make new featherboards when existing ones have been damaged.

1. Use solid (knot free) lumber 24 inches by 5 1/2 inches by 3/4 inch.

2. On the 24 inch sides mark a point 5 1/2 inches down on the left and 9 1/2 inches down on the right from the edge of the board. Draw a line between the points.

3.Crosscut workpiece at a 30° angle then rip to make the kerfs.

4. Do not clamp the featherboard against the cut off part of the workpiece.

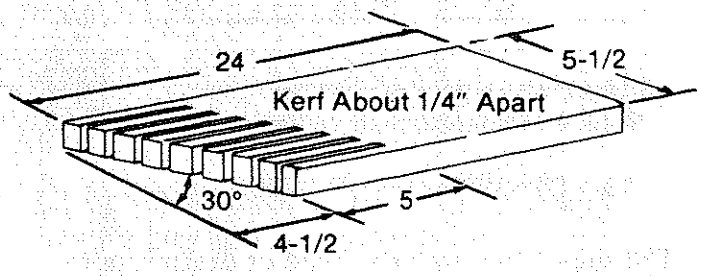

Note: All Dimensions in Inches

Fig. 116 Featherboard Dimensions

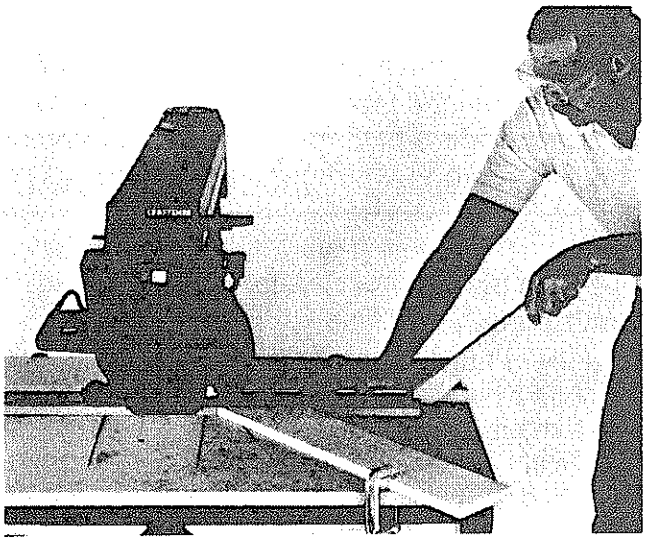

Fig. 117 Way to Use a Featherboard

Attaching Auxiliary Board to Crooked Workpiece

If the workpiece you want to rip cut does not have a straight edge, attach an auxiliary board to the workpiece.

1. Place irregular side of workpiece against fence.

2. Place straight edged auxiliary board on top of workpiece and against fence.

3. Tack the auxiliary board to the workpiece. The auxiliary board must not extend beyond the leading end of the workpiece and should cover the workpiece width only enough to pass between the blade and fence.

4. Use a fence that is equal to or higher than the combined height of the workpiece and auxiliary board.

Glossary

Anti-kickback Pawls: Pivoted objects with teeth which help prevent workpiece kickback.

Arbor: The bar or shaft that holds the saw blade.

Bevel: The slanting of the motor and blade to an angle between 0° and 90°.

Crosscut: Cutting a workpiece to length.

Dado: Non-through cut which produces a square sided notch or trough in the workpiece.

Featherboard: Device used to keep workpiece in contact with the fence during ripping.

Freehand: Performing a cut without the use of fence, guide or hold-down designed to prevent the workpiece from moving during the cutting operation.

Heel: Misalignment of the blade relative to blade travel path.

Infeed: The end of the saw blade where the workpiece is fed during ripping; identified by the absence of pawls.

In-Rip: Positioning the the motor toward the front of the table, the blade toward the fence.

Kerf: Slot caused by removal of material by the blade in a through cut, or a shallow slot produced by the blade in a non-through cut.

Kickback: Uncontrolled throwing of the workpiece during ripping.

Miter: Positioning the saw arm to the right or left of 0°.

Molding Cut: Non-through cut which produces a contoured surface on the workpiece.

Outfeed: The end of the saw blade where the rip cut workpiece leaves the saw blade; identified by presence of pawls.

Out-rip: Positioning the motor toward the fence, the blade toward the front of the table during ripping.

Parallel: When two surfaces are the same distance apart at all points.

Perpendicular: When two surfaces are 90° (square) to each other.

Push Block/Auxiliary Fence: Two accessories used together for ripping a workpiece between 1/2 inch and 2 inches wide.

Push Stick: Cutting accessory used during ripping a workpiece between 2 inches and 6 inches wide.

Revolutions Per Minute (RPM): Number of turns completed by an object in one minute.

Ripping: Used to change the width of a workpiece by cutting along its length.

Spreader: Used during ripping to keep the kerf from closing and pinching the blade. It helps prevent kickback.

Workpiece: Object being cut by the saw.

Helpful Hints

In order to get accurate cutting results from your radial arm saw, do the following:

1. Follow all steps in the Alignment of the Blade section.

2. Place the long edge of your framing square against the edge of the workpiece that will be held against the fence during cutting. Make sure that this edge of the workpiece is straight.

3. Make sure that your workpiece lays flat on the front table of your saw.

4. Clean all sawdust and woodchips from the table.

5. Hold the workpiece firmly against the fence and table during all cuts. You should use extra force during miter and bevel cuts since the workpiece tends to move when these cuts are made.

6. Use the right sawblade for each job, and make sure that all blades and cutting tools are sharp.

When making a four-sided frame:

1. Make sure that the top and bottom pieces are exactly the same length.

2. Make sure that both side pieces are exactly the same length.

3. Place the same edge of the workpiece against the fence for all cuts. Make the first cut at one end of the workpiece, then flip the workpiece over and make the second cut from the other end. Continue this way until all four cuts are made. (Figure 119)

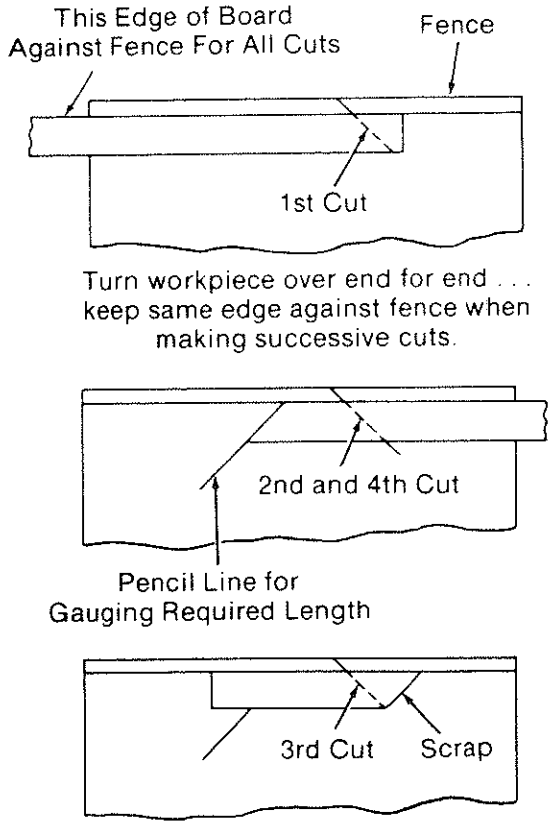

Fig. 119 - Making a 4-Sided Frame

4. Make a pencil line on the table for gauging the length of each cut.

Motor

To avoid motor damage this motor should be blown out or vacuumed frequently to prevent sawdust buildup which will interfere with normal motor ventilation.

If the motor fails to start, turn the power switch to the "OFF" position immediately. Remove the yellow key. UNPLUG THE TOOL. Check the saw blade to insure that it turns freely and that its teeth are not wedged into the table top. After the blade has been freed, try to start the motor again. If, at this point, the motor still fails to start, refer to the "Motor Trouble-Shooting Chart."

If the motor should suddenly stall while cutting wood, the power switch should be turned off, remove the yellow key and unplug the power cord. Free the blade from the wood. The motor may now be restarted and the cut finished.

Frequently blowing of fuses or tripping of circuit breakers may result if:

- Motor is overloaded: Overloading can occur if you feed too rapidly or if saw is misaligned so that the blade heels.
- Motor circuit is fused differently from recommendations: Always follow instructions for the proper fuse/breaker. Do not use a fuse/breaker of greater capacity without consulting a qualified electrician.
- Low voltage: Although the motor is designed for operation on the voltage and frequency specified on the nameplate, normal loads will be handled safely on voltages not more than 10% above or below the nameplate voltage. Heavy loads, however, require that voltage at motor terminals equal the voltage specified on nameplate.
- Improper extension cord size.

General

⚠ WARNING: For your own safety, turn power switch off and remove plug from power source outlet before maintaining or lubricating your saw.

When you receive your new Craftsman radial saw, it requires no lubrication. The radial saw has been partially aligned and all bearings are lubricated and sealed for life. In time, however, in order to keep your saw in perfect working order and accurate, it will be necessary to lubricate and realign. In fact your radial saw needs more of a cleaning than a lubrication.

Replacing Antikickback Pawls

Make sure the teeth of the *antikickback pawls* are always sharp. If they become dull they must be replaced. With a 1/2 inch wrench or socket remove the 5/16 hex nut and old *pawls*. Reassemble new *antikickback pawls* and *spreader* to the bar. Check *spreader* for proper alignment and correct if necessary. (See Alignment of the Blade, Installing Guard / Setting Spreader section.)

Cleaning

Periodically remove any heavy build-up of sawdust that may accumulate on the saw. The absorbing tendency of sawdust will draw lubricants away from the areas where they are needed. Clean the *carriage bearings* and *track* surfaces. If packed sawdust and grease accumulate repeatedly on carriage bearings and track inspect the *wipers* for wear and replace if necessary. (See Adjustments to Compensate for Wear, Swivel Lock, later in this section.)

To avoid motor damage the *motor* should be blown out or vacuumed frequently to prevent sawdust build-up which will interfere with normal motor ventilation.

Lubrication

Your saw is precision built and should be kept properly lubricated. Before describing the various points which may periodically require lubrication, it is more important to first mention the points which should **not** be lubricated.

Do not lubricate the following:

- carriage ball bearings
- motor bearings
- area between the miter locking rings and the column tube

The *carriage ball bearings* and *motor bearings* are sealed ball bearings which require no added lubrication.

Do lubricate the following, periodically, using SAE No 10W-30 automotive engine oil:

- Apply a few drops of oil along the *swivel index pin* and the *bevel index pin* only if the pins have a tendency to stick. Swivel to in-rip or out-rip for easy access to the *swivel index pin*. Bevel to 45°and *bevel index pin* can be easily accessed behind the *yoke* as illustrated. (Figure 121)

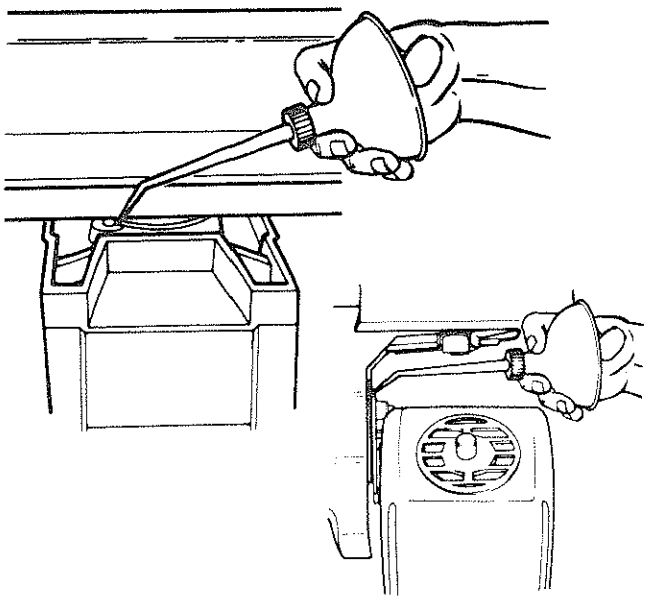

Fig. 120 - Swivel and Bevel Index Pins

- Lubricate the bearing points where the *arm* attaches to the *column tube.* With a #2 Phillips screwdriver remove two screws and the rear arm cover for access to these points. Be careful not to get lubricant on the *locking rings* as this will adversely affect the miter locking function. (Figure 121)

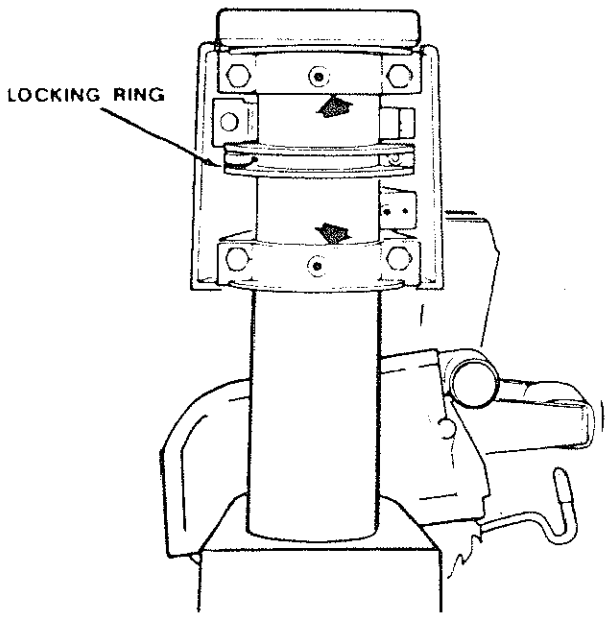

Fig. 121 - Bearing Points Where Arm Attaches to Column Tube

- Lubricate the cam surfaces of the *rip lock* assembly.

- A light film of oil should be wiped on the face of the *column tube* to lubricate the fit between the *column tube* and *column support.* With elevation *handwheel* raise *arm* to upper limit.

- The thread on the *elevation shaft* assembly can be lubricated through the oil hole in the center of the *radial arm cap.* Lubricate ramp on the *swivel index spring.*

- Apply a few drops of oil to the *foot assemblies*, where the *levers* are inserted through the *rods.*

Do not use too much oil. Excessive oil at any location will attract airborne dust particles and sawdust.

Refer to parts lists for locations of parts as needed.

Adjustments for Wear

Bevel Lock

The purpose of the *bevel lock* is to lock the *motor* at any bevel angle. An adjustment is required if the *motor* can be easily moved by hand when the *bevel lock* is locked or if *bevel lock* offers minimal resistance when moving it to the locked position. To make this adjustment:

1. Remove *motor support cover.*

2. Position the motor at approximately 30° bevel angle and lock *bevel lock.* (Figure 122)

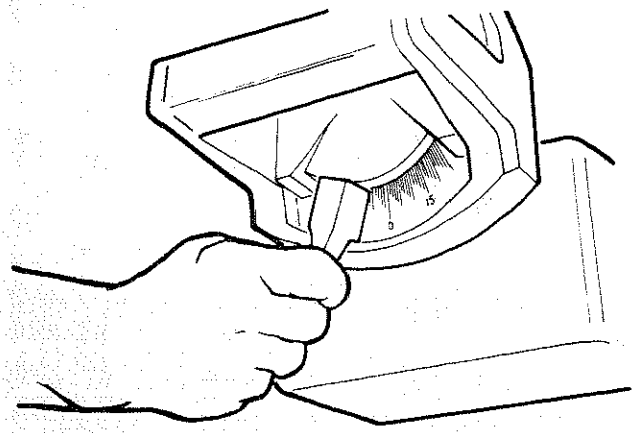

Fig. 122 - Bevel Lock - Locked

3. With a 3/4 socket tighten the 1/2-13 hex nut located at the back of the *motor support casting* until the *motor* can no longer be easily moved by hand. Do not overtighten.

4. Unlock *bevel lock* and move *motor* to any of the five index positions. If the *motor* does not index securely the adjustment is too tight. Loosen 1/2-13 hex nut until *bevel index pin* seats properly.

5. Adjustment is complete when both locking and indexing functions are working properly. Replace *motor support cover.*

Swivel Lock

This *handle* provides a friction lock between the upper face of the *yoke* and the bottom face of the *carriage*. It should eliminate any play or rotation between these two parts when locked. An adjustment is required if the *yoke* can be easily rotated by hand when *handle* is locked or *yoke lock handle* offers minimal resistance when moving *handle* to the locked position. To make this adjustment:

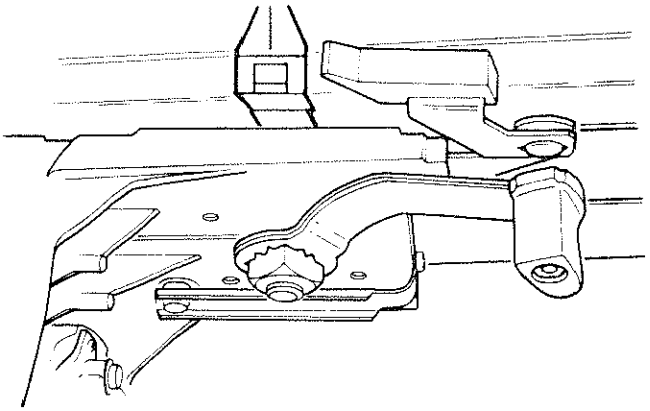

Fig. 123

1. Remove *screw* and *nut* from *knob* on *swivel lock*. Remove *knob* from *swivel lock arm* using a regular screw driver.

2. Seperate the *wrench* from the *lever* by rotating the *wrench* a few degrees counter-clockwise from the *lever* to disengage *tab.*

3. Using the *wrench* portion tighten the *square nut* one quarter rotation at a time. This is done by locating the *wrench* across the corners of the *square nut* then moving the *wrench* until it lines up with the *arm* portion.

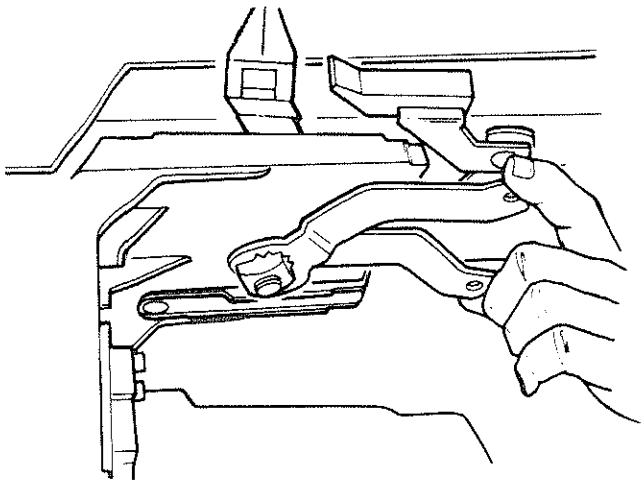

Fig. 124

4. Holding the *wrench* and *arm* in position, rotate *yoke* to a non-preset position and rotate *swivel lock* to the locked position. If the *yoke* can still be moved, the *square nut* has not been tightened enough. Repeat step 3.

5. When the adjustment is such that the *yoke* can no longer be moved when the *swivel lock* is in the locked position, re-insert the *tab* on the *wrench* into the slot in the lever.

6. Unlock *swivel arm* and rotate *yoke* to a non-preset position. Return *yoke* to a rip position. If the *index pin* does not securely seat at the preset position, the adjustment is too tight. Loosen the *square nut* one quarter turn until *swivel index pin* seats securely.

7. Adjustment is complete when both locking and preset position functions are working properly.

8. When the adjustment is such that the *yoke* can no longer be moved when the *swivel lock* is in the locked position, reinsert the *tab* on the *wrench* into the slot in the lever.

9. Re-install *knob* to *swivel handle* and install *screw* and *nut* in *knob*.

Arm and Column

With the *miter lock* unlocked and in the unindexed position the *arm* should fit snugly to the *column tube* and not allow any vertical movement. If you can move the end of the *arm* up and down an adjustment is needed.

1. With a #2 Phillips screwdriver remove two screws and the *rear arm cover*.

2. With a 9/16 inch wrench or socket tighten evenly the top two 3/8-16 hex head tapping screws. The bottom two screws should also be tightened evenly but not as tight as the top screws. (Figure 125)

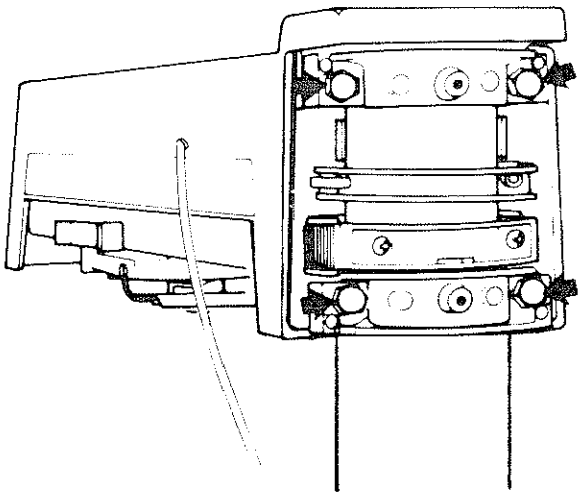

Fig. 125 - Location of Hex Head Tapping Screws

3. This adjustment is correct when the *arm* moves firmly without vertical movement.

4. Re-install the *rear arm cover*.

Carriage Bearings

The *carriage* should roll freely but with some resistance for the entire length of travel. To check for bearing looseness, perform the following steps.

1. Place *yoke* in either the in-rip or out-rip position.

2. Push the *carriage* back against the rear stop.

3. Hold the *front carriage bearing* with your fingers as tight as possible and pull *carriage* forward at the same time. If you can prevent the *bearing* from turning an adjustment is required. (Figure 126)

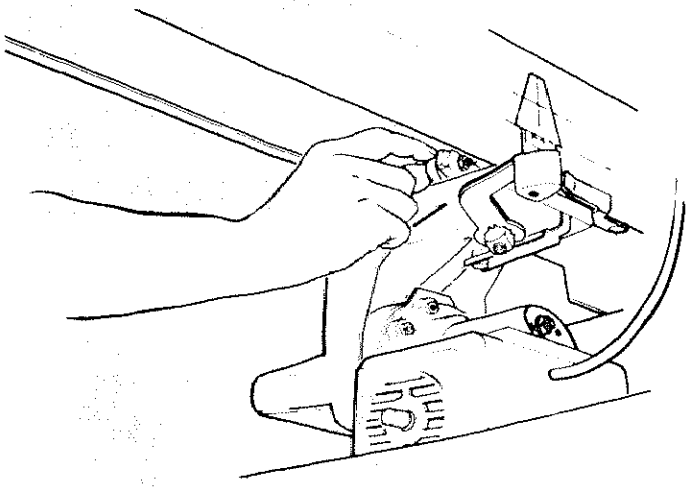

Fig. 126 - Front Carriage Bearings

4. Repeat step 3 with the *rear carriage bearings.*

To adjust the *carriage bearings* perform the following steps:

1. Clean and lubricate the bearing races and the bead on which they ride prior to adjustment.

2. To adjust the bearing, use a 9/16 inch wrench to hold the bolt head while using a 1/2 inch wrench to loosen the hex nut. (Figure 127)

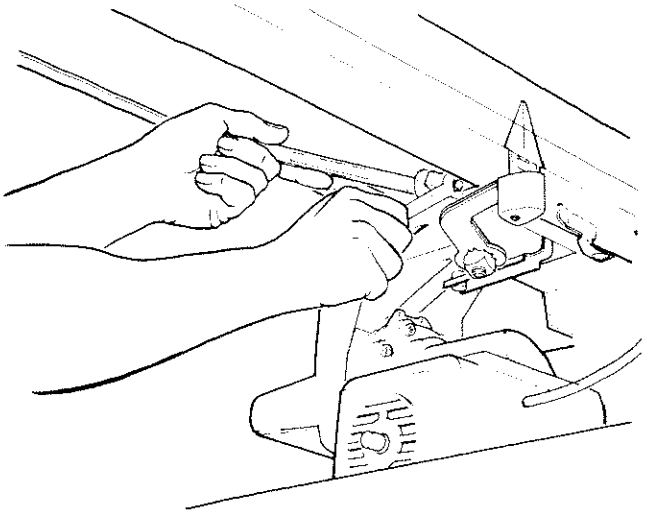

Fig. 127 - Location of Hex Nut

3. Rotate the *eccentric bolts* a partial turn (left or right) as required to take up looseness. Both *bolts* should be adjusted an equal amount to maintain blade squareness to the table in the rip positions.

4. Hold the head of the *eccentric bolts* in their new position and retighten the nuts. Do not overtighten. Overtightening the *bearings* will cause difficult operation and severly reduce the life of the *track* and *bearings.*

5. Repeat the test procedure as described above and readjust if necessary.

Miter Lock

The *miter lock* operates adjustable locking bands which lock the *arm* to the *column tube* in both indexed and unindexed positions. If the *arm* can be easily moved by hand when locked in an unindexed position the following adjustment must be made.

1. Move the *arm* to an unindexed position and leave the *miter lock* in the unlocked position. (Figure 128)

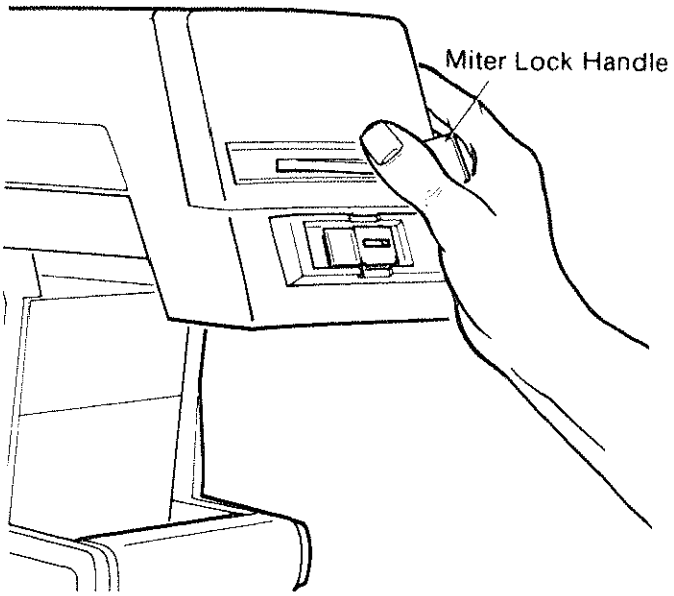

Fig. 128 - Miter Lock - Unlocked

2. With a 3/16 inch hex "L" wrench find the 1/4-20 hex socket cap screw through the hole in the rear of the *arm cover.* To tighten turn the wrench clockwise approximately 1/4 turn. (Figure 129)

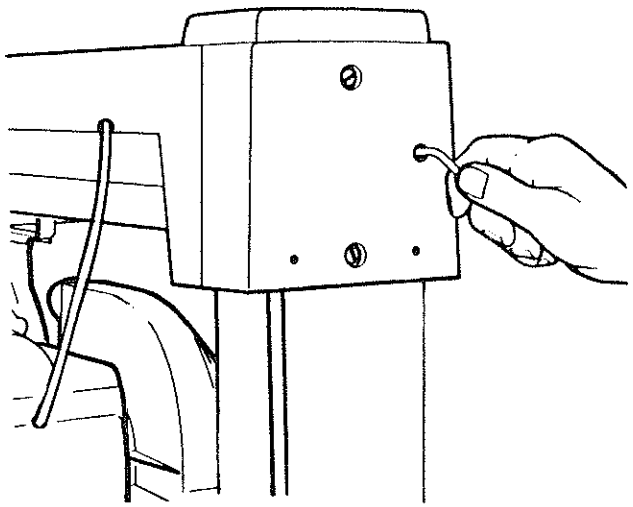

Fig. 129 - Location of Hex Socket Cap Screw

3. Lock the *miter lock* and try again to move the *arm.* Readjust if necessary.

4. If it becomes extremely difficult to push the *miter lock* into the locked position too much adjustment has been made. Turn the wrench counterclockwise one half the amount of the last adjustment and try again to lock the *arm.*

Rip Lock

The *rip lock* locks the *carriage* in any position along the length of the *arm.* If the *carriage* can be easily moved by pushing and pulling on the *yoke handle* when the *rip lock* is in the locked position an adjustment is required.

1. Hold the *rip lock* in the unlocked position and with a 7/16 inch wrench tighten the 1/4-20 hex lock nut 1/4 turn. (Figure 103)

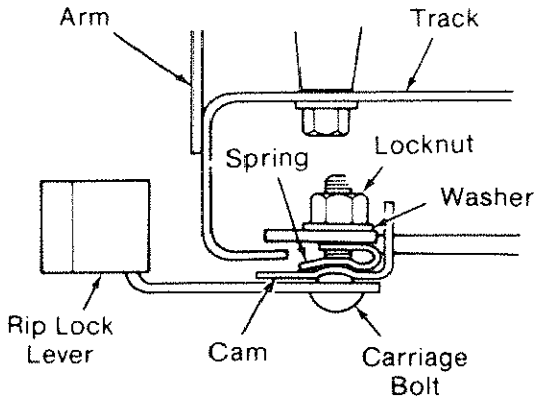

Fig. 130 - Location of Hex Lock Nut

2. Lock the *rip lock* and try again to move the *carriage.* Make additional adjustments if necessary.

3. Place the *rip lock* in the unlocked position and move the *carriage* back and forth from stop to stop. If the *carriage* is difficult to move at any point or you can feel the *rip lock* dragging on the track the adjustment is too tight. Loosen the hex nut one half the amount of the last adjustment and try again.

Trouble Shooting

⚠ WARNING: To avoid injury, turn power switch off and remove plug from power source outlet before trouble shooting.

Motor

Problem	Probable Cause	What to Do
Motor will not run.	Low voltage.	Check power line for proper voltage.
Motor will not run and fuses blow.	Short circuit in line, cord, or plug.	Inspect line, cord, and plug for damaged insulation and shorted wires.
	Short circuit in motor or loose connections.	Inspect all terminals in motor for loose or shorted terminals or worn insulation wires.
	Incorrect fuses in power line.	Install correct fuses.

Motor - 2

Problem	Probable Cause	What to Do
Motor fails to develop full power. (Power output of motor decreases rapidly with decrease in voltage at motor terminals. For example: a reduction of 10% in voltage causes a reduction of 19% in maximum power output of which the motor is capable, while a reduction of 20% in voltage causes a reduction of 36% in maximum power output.)	Power line overloaded with lights, appliances, and other motors.	Reduce the line load.
	Undersize wires or circuit too long.	Increase wire sizes, or reduce length of wiring.
	General overloading of power company's facilities. (In many sections of the country, demand for electrical power exceeds the capacity of existing generating and distribution systems).	Request a voltage check from power company.
Motor overheats.	Excessive feed rate when crosscutting or ripping.	Slow down rate of feed.
	Improper cooling. (Air circulation restricted through motor due to sawdust, etc.)	Clean out sawdust to provide normal air circulation through motor.
	Saw blade has heel.	Refer to Making Blade Parallel to Table section.
Motor starts slowly or fails to come up to full speed.	Starting switch will not trip due to low voltage.	Correct low voltage condition.
Motor stalls resulting in blown fuses or tripped circuit breakers.	Voltage too low to permit motor to reach operating speed.	Correct the low line voltage condition.
	Fuses or circuit breakers do not have sufficient capacity.	Replace fuses or circuit breakers with proper capacity units.
Frequent opening of fuses or circuit breakers.	Motor overloaded.	Reduce motor load.
	Fuses or circuit breakers do not have sufficient capacity.	Replace fuses or circuit breakers.

Saw Operations

Problem	Probable Cause	What to Do
Crosscuts not accurate at 0° and 45° miter.	Looseness between column tube and column support.	Go to Alignment of the Blade, Adjusting Elevation.
	Crosscut travel not square with fence.	Go to Alignment of the Blade, Squaring Crosscut Travel.
	Column is loose in support.	Go to Alignment of the Blade, Adjusting Elevation.
	Arm not indexing properly.	Go to Maintaining Your Saw, Adjustments for Wear, Miter Lock.
	Carriage assembly loose on arm.	Go to Alignment of the Blade, Squaring Blade to Table for Ripping.
	Looseness between yoke and carriage assembly.	Go to Maintaining Your Saw, Adjustments for Wear, Swivel Lock.
	Sawdust between workpiece and fence.	Keep front table clean.
	Fence not straight.	Replace fence.
Saw cuts at slight bevel (not 90° to table).	Work table not properly leveled.	Go to Alignment of the Blade, Leveling Front Table.
	Blade not square to table.	Go to Alignment of the Blade, Squaring Blade to Table for Crosscutting.
	Carriage Bearings Loose	Go to Alignment of the Blade, Squaring Blade to Table for Ripping.
	Bevel lock loose.	Go to Maintaining Your Saw, Adjustments for Wear, Bevel Lock.

Saw Operations - 2

Problem	Probable Cause	What to Do
Workpiece kerf rough with tooth marks from blade (also called heel).	Saw blade not square to fence.	Go to Alignment of the Blade, Squaring Blade to Fence.
	Saw blade not parallel to table.	Go to Alignment of the Blade, Making Blade Parallel to Table.
	Using improper blade for finish cut desired.	Use proper smooth cutting blade.
Wood binds, smokes, and motor slows down or stops when ripping.	Dull blade or warped board.	Sharpen or replace the saw blade. Do not use severely warped material.
	Feed rate too fast.	Slow feed rate.
	Saw blade heels.	Go to Alignment of the Blade, Making Blade Parallel to Table.
	Fence not straight.	Replace fence.
	Carriage assembly loose on arm.	Go to Alignment of the Blade, Squaring Blade to Table for Ripping.
Board pulls away from fence when ripping.	Saw blade has heel.	Go to Alignment of the Blade, Making Blade Parallel to Table.
Workpiece strikes spreader when ripping.	Spreader not in line with blade.	Go to Alignment of the Blade, Installing Guard / Setting Spreader.
Saw does not travel smoothly on arm.	Dirty track.	Clean track and lubricate with light grease.
	Bad bearing.	Replace bearing.
	Worn track.	Replace track.
Clamping force not sufficient at miter angles other than 45°.	Miter lock needs adjustment.	Go to Maintaining Your Saw, Adjustments for Wear, Miter Lock.

Saw Operations - 3

Problem	Probable Cause	What to Do
Clamping force not sufficient at bevel angles other than 45°.	Bevel lock needs adjusting.	Go to Maintaining Your Saw, Adjustments for Wear, Bevel Lock.
Depth of cut varies from one end of the workpiece to the other.	Table top not parallel with arm.	Go to Alignment of the Blade, Leveling Front Table.
Blade tends to advance through lumber too fast.	Dull blade.	Replace or sharpen blade.
	Not advancing saw properly.	Draw saw blade across lumber with a slow and steady pull.
Table cannot be leveled. (Right side is higher than left side with no adjustment left, or vice versa.)	Column support shifted where it mounts to saw base.	Loosen the six bolts that hold the column support to the saw base and shift arm.

PARTS LIST FOR CRAFTSMAN 10" RADIAL SAW
MODEL NO. 113278641C

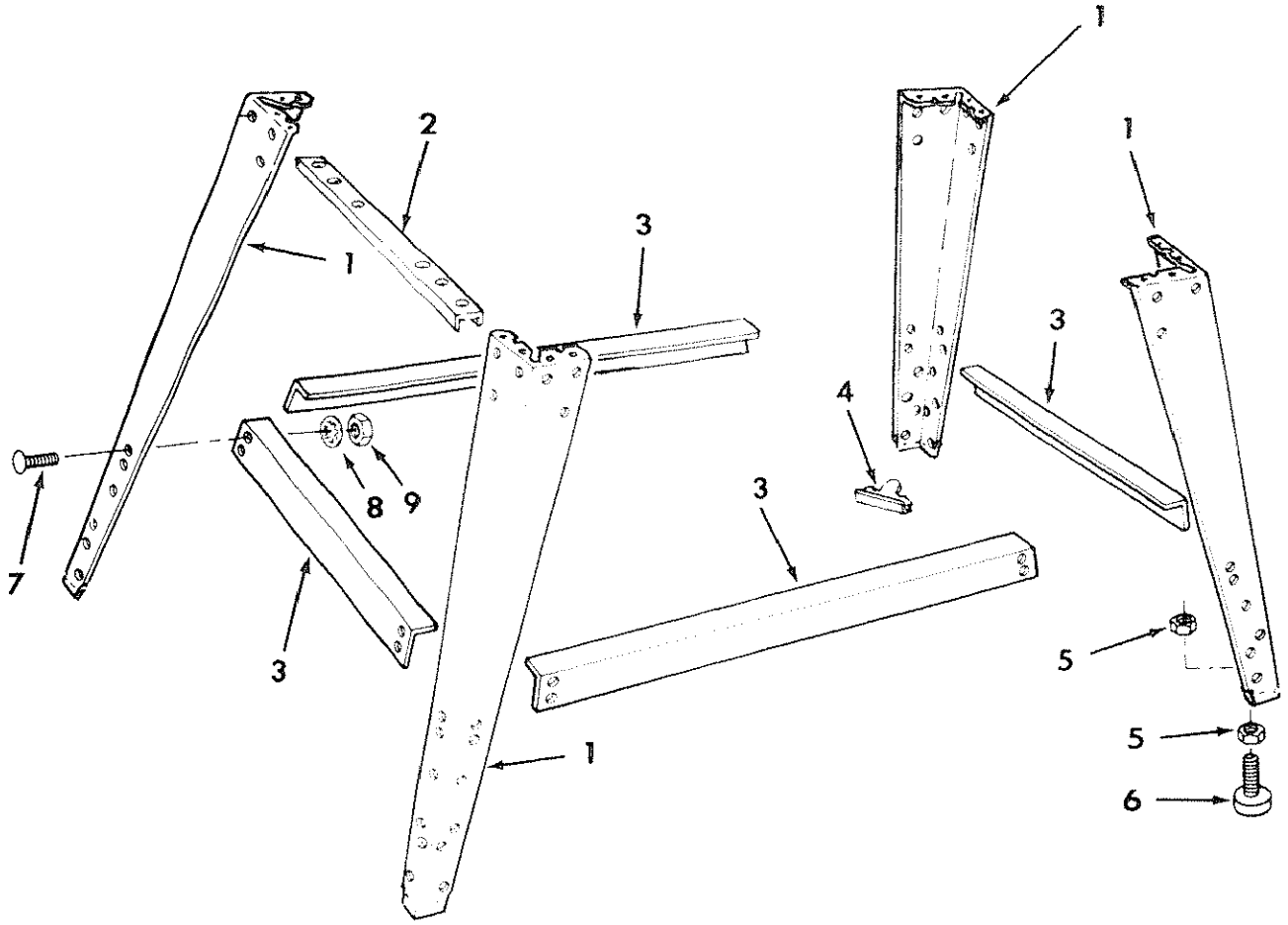

Always order by Part Number—Not by Key Number

FIGURE 1 — LEG SET

Key No.	Part No.	Description
1	818213	Leg
2	818163	Channel, Leg
3	815909	Stiffener, Lower
4	818170	Bracket, Leg
5	STD541237	* Nut, Hex Jam 3/8-16
6	803835-1	Foot, Leveling
7	805589-5	Screw, Truss Hd. 1/4-20 x 1/2
8	STD551225	* Lockwasher, Int. 1/4
9	STD541025	* Nut, 1/4-20

* Standard Hardware Item - May be purchased locally.

PARTS LIST FOR CRAFTSMAN 10" RADIAL SAW
MODEL NO. 113278641C

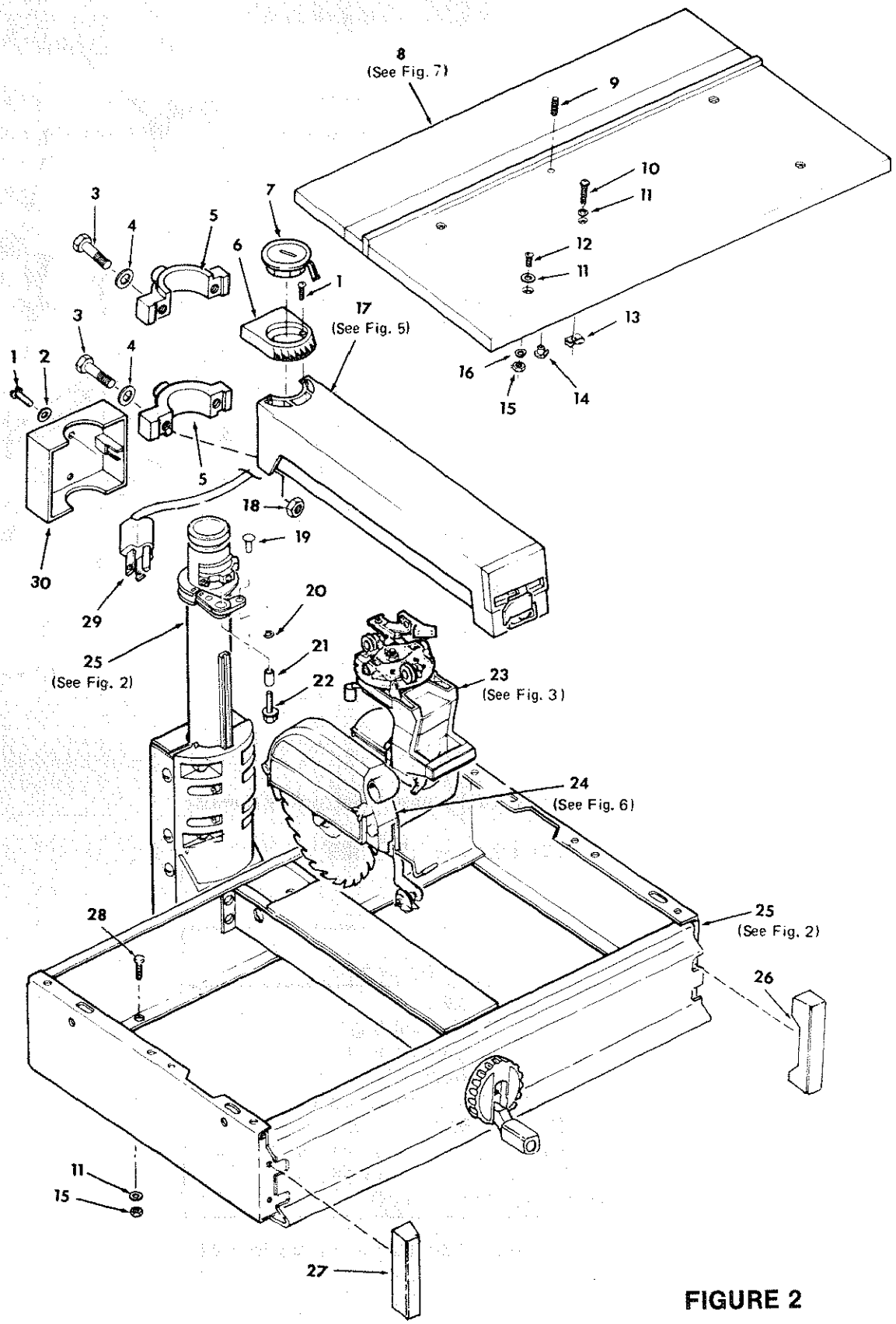

FIGURE 2

PARTS LIST FOR CRAFTSMAN 10" RADIAL SAW
MODEL NO. 113278641C

Always order by Part Number—Not by Key Number

FIGURE 2

Key No.	Part No.	Description
1	816333-1	Screw, Pan Rec. Type "TT" 10-32 x 1/2
2	STD551010	* Washer, Flat 13/64 x 7/16 x 1/16
3	60339	Bolt, Hex Hd. 3/8-16 x 2-1/8
4	60353	Washer, .380 x 47/64 x 1/8
5	815649	Bearing, Arm
6	815777	Scale, Miter
7	815778	Indicator, Miter
8	—	Table Boards (See Fig. 7)
9	60074	Screw, Hex Socket Set 1/4-20 x 7/8
10	806828-3	Screw, Pan Hd. Rec. Type "T" 1/4-20 x 1-3/4
11	STD551012	* Washer, 17/64 x 5/8 x 1/32
12	STD512510	* Screw, Pan Hd. 1/4-20 x 1
13	815989	Clip, "U" 1/4-20
14	37384	Nut, Tee
15	STD541025	* Nut, Hex 1/4-20
16	STD551225	* Lockwasher, 1/4
17	—	Arm Assembly (Fig. 5)

Key No.	Part No.	Description
18	STD541037	* Nut, Hex 3/8-16
19	815774	Rivet 1/4 x 1/2
20	60208	Nut, Push 1/4
21	815980	Bushing
22	815856-1	Screw, Hex Washer, Hd. 5/16-18 x 1-1/4
23	—	Yoke and Motor Assembly (See Fig. 3)
24	—	Guard Assembly (See Fig. 6)
25	—	Base and Column Assembly (See Fig. 2)
26	818192	Cap, Trim R.H.
27	818193	Cap, Trim L.H.
28	805589-5	Screw, Truss Hd. 1/4-20 x 1/2
29	816114	Cord with Plug
30	815773	Cover, Rear Arm
—	SP5408A	Owner's, Manual - English (Not Illus.)
—	SP5408B	Owner's Manual - French (Not Illus.)

* Standard Hardware Item - May be purchased locally.

PARTS LIST FOR CRAFTSMAN 10″ RADIAL SAW
MODEL NO. 113278641C

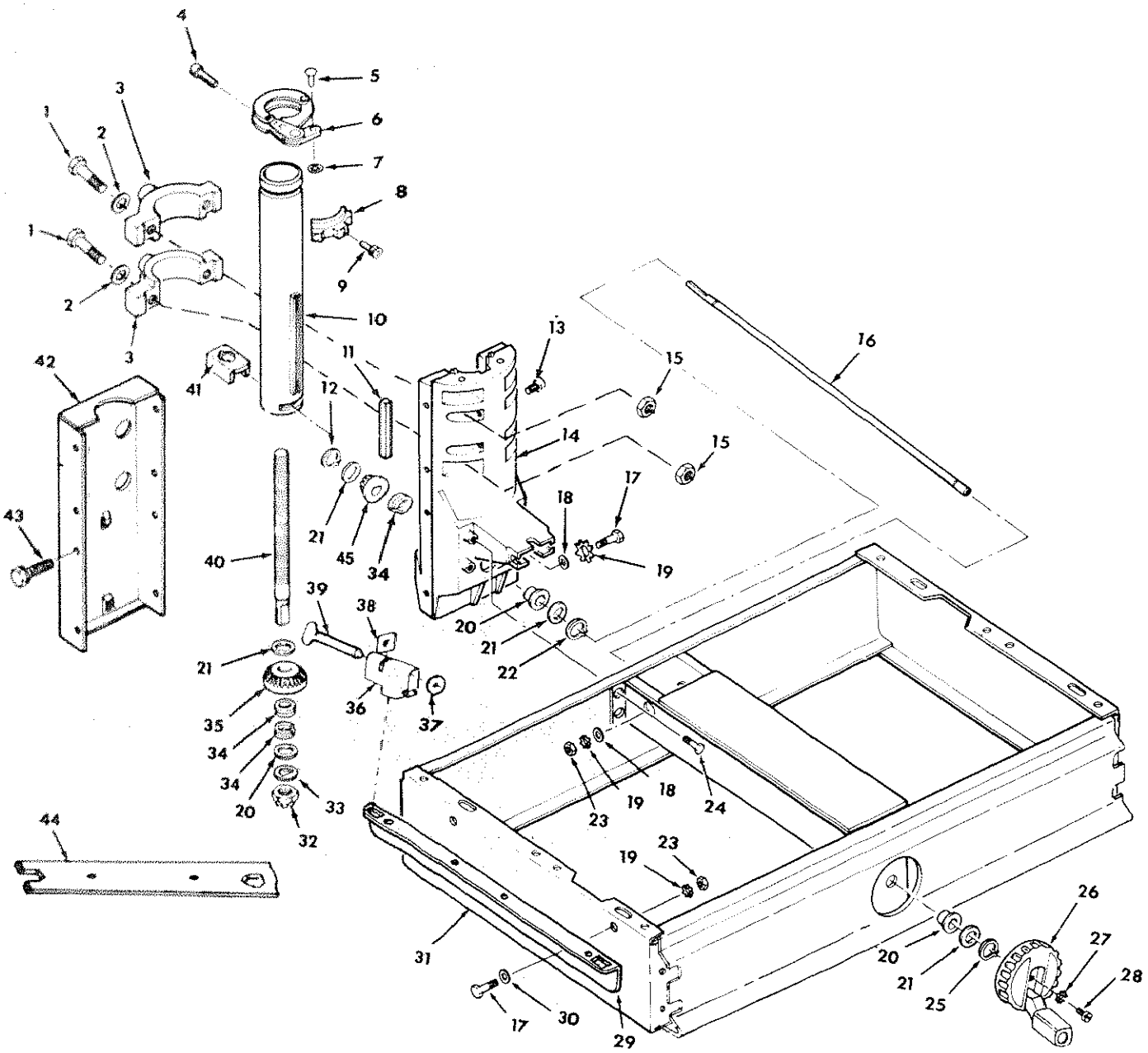

FIGURE 3

PARTS LIST FOR CRAFTSMAN 10" RADIAL SAW
MODEL NO. 113278641C

Always order by Part Number—Not by Key Number

FIGURE 3 — BASE AND COLUMN ASSEMBLY

Key No.	Part No.	Description
1	60339	Bolt, Hex Hd. 3/8-16 x 2-1/8
2	60353	Washer, .380 x 47/64 x 1/8
3	815649	Bearing, Arm
4	817398-2	*Screw, Socket Hd. Cap 1/4-20 x 1-1/4
5	815774	Rivet, 1/4 x 1/2
6	818198	Lock Assembly
7	60208	Nut, Push 1/4
8	815763	Latch Arm
9	816647	Screw, Soc. Hd. Ty "T" 1/4-20 x 3/4
10	818226	Tube
11	815770	Gib, Column Tube
12	STD581043	*Ring, Retaining 7/16
13	817398-1	Screw, Locking Cap 1/4-20 x 5/8
14	818212	Support, Column Tube
15	STD541037	*Nut Hex 3/8-16
16	818177	Shaft, Elevating Crank
17	STD523107	*Screw, Hex Hd. 5/16-18 x 3/4
18	STD551031	*Washer, 21/64 x 3/4 x 1/16
19	STD551131	*Lockwasher, External 5/16
20	815772	Bushing, Elevation
21	63500	Washer, Thrust .502 x .927 x .031
22	STD582050	*Ring, Retaining 1/2
23	STD541031	*Nut, Hex 5/16-18
24	9416187	Screw, Hex Hd. Ty "T" 5/16-18 x 3/4
25	804182	*Ring, Retaining 1/2
26	818237	Handwheel
27	STD551210	*Lockwasher, External #10
28	STD511105	*Screw, Pan Hd. 10-32 x 1/2
29	818199	Channel, Table Mtg.
30	60013	Washer, 11/32 x 7/8 x 1/16
31	818215	Base Assembly
32	STD541450	*Nut, Lock 1/2-13
33	817106	Washer, Keyed
34	63614	Bearing Lift Shaft
35	818164	Gear, Bevel
36	818166	Bracket, Clamp
37	818161	Shoe, Table Clamp
38	120399	Nut, Square 5/16-18
39	818162	Screw, Clamp
40	818167	Shaft, Elevating
41	818224	Nut, Elevation
42	815864	Cover, Column Support
43	815865	Screw, Hex Washer Hd. Type "T" 1/4-20 x 1/2
44	3540	Wrench
45	818165	Gear, Pinion

*Standard Hardware Item may be Purchased Locally.

PARTS LIST FOR CRAFTSMAN 10" RADIAL SAW
MODEL NO. 113278641C

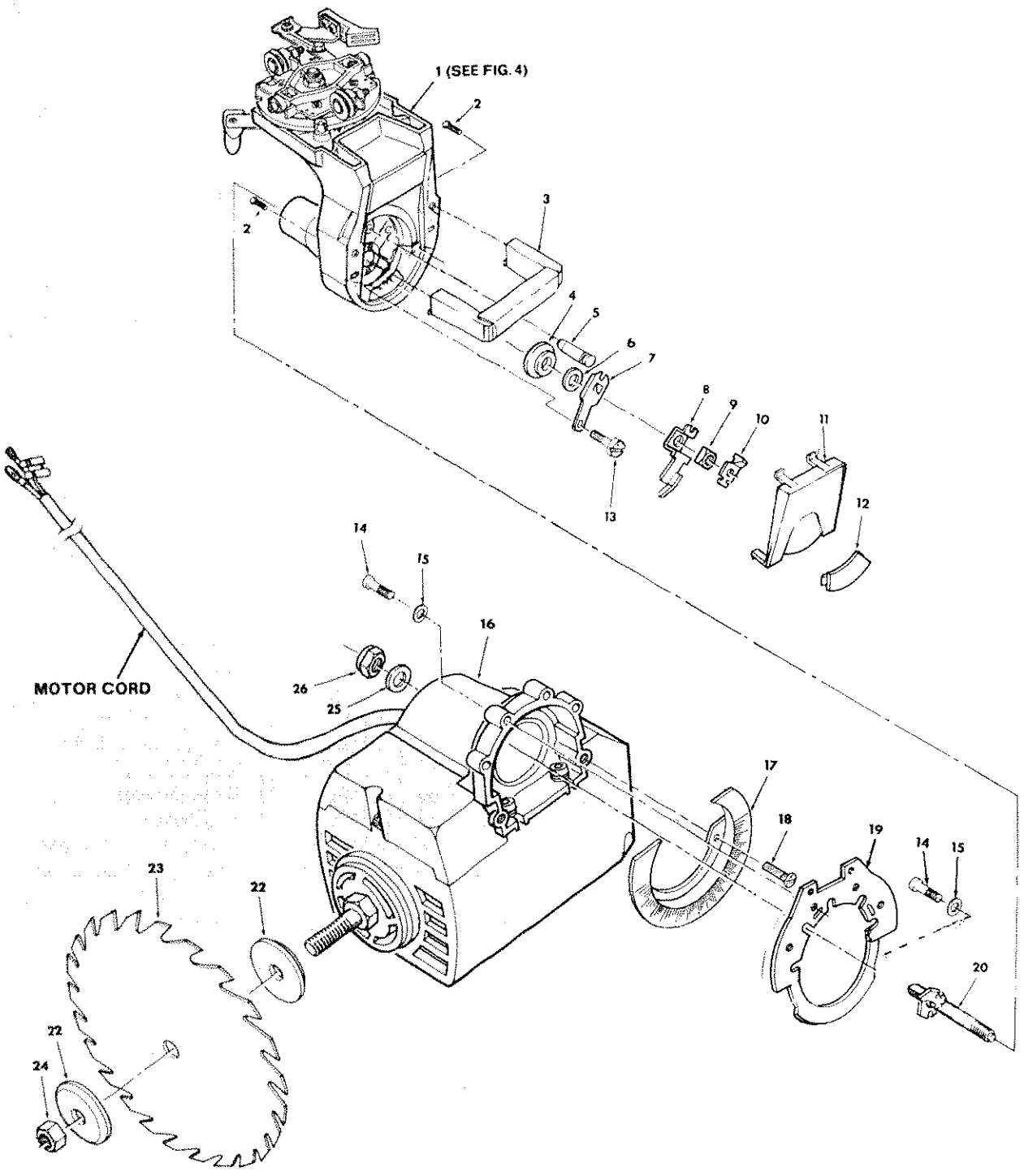

FIGURE 4

PARTS LIST FOR CRAFTSMAN 10" RADIAL SAW
MODEL NO. 113278641C

Always order by Part Number—Not by Key Number

FIGURE 4 — YOKE AND MOTOR ASSEMBLY

Key No.	Part No.	Description
1	—	Yoke Assembly (see Figure 4)
2	808380-6	Screw, Pan Hd., Plastite No. 8 x 1
3	818202	Handle, Yoke
4	815678	Washer, Shaft
5	815679-1	Pin, Index
6	805561-10	Washer, .505 x 7/8 x 1/16
7	815791	Spring, Bevel
8	818154	Lever, Bevel Lock
9	815813	Nut, Square 1/2-13
10	815836	Wedge, Bevel Spring
11	818204	Cover, Yoke
12	815788	Indicator, Bevel
13	806828	Screw, Pan Hd. Type "T" 1/4-20 x 1/2
14	815992	Screw, Soc. Hd. Type "TT" 1/4-20 x 5/8
15	STD551012	*Washer, 17/64 x 9/16 x 1/16
16	818906	•Motor
17	815800	Scale, Bevel
18	STD600803	*Screw, Pan Hd. 8-32 x 3/8
19	818197	Plate, Index
20	508153	Shaft Support
22	62498	Collar, Blade
23	9-32668	†Blade, Saw
24	30495	Nut, Shaft
25	805561-10	Washer, .505 x 7/8 x 1/16
26	805839-1	Nut Lock 1/2-13

*Standard Hardware Item may be Purchased Locally.

†Stock Item may be Secured Through the Hardware Department of Most Sears Retail or Catalog Order Houses.

•Any attempt to repair this motor may result in unit misalignment and create a HAZARD unless repair is done by a qualified service technician. Do not loosen the three screws holding the motor support to the motor. This assembly is factory aligned. Repair service is available at your nearest Sears Store.

PARTS LIST FOR CRAFTSMAN 10" RADIAL SAW
MODEL NO. 113278641C

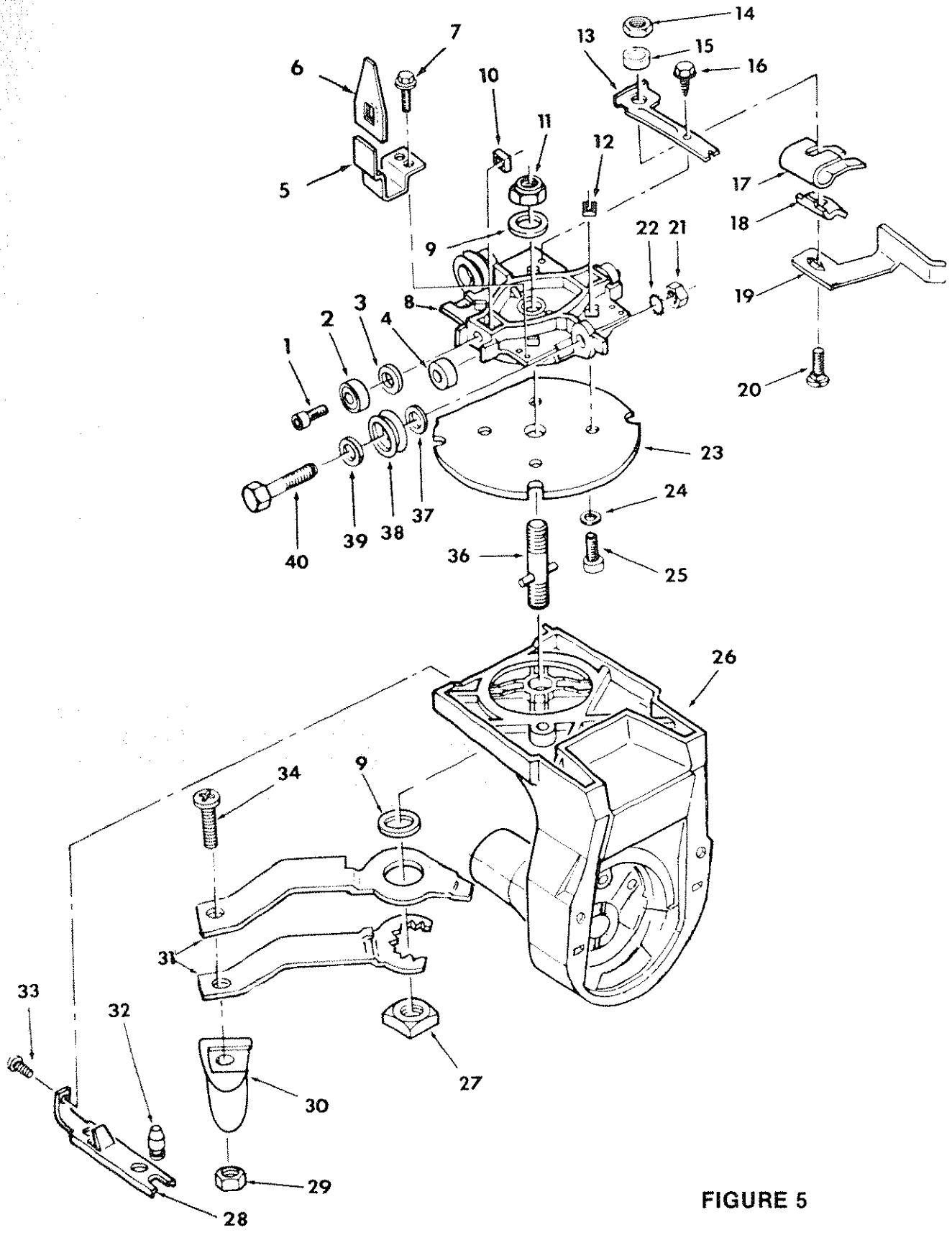

FIGURE 5

PARTS LIST FOR CRAFTSMAN 10" RADIAL SAW
MODEL NO. 113278641C

Always order by Part Number—Not by Key Number

FIGURE 5 — YOKE ASSEMBLY

Key No.	Part No.	Description
1	810214-3	Screw, Low Hd. Cap 5/16-18 x 7/8
2	STD315485	*Bearing, Ball. .3150 I.D.
3	STD551031	*Washer, 21/64 x 5/8 x 1/32
4	817181	Wiper, Track
5	815805	Support, Indicator
6	815806	Indicator, Rip
7	159572-98	Screw, Hex Wash Ty "T" 8-32 x 1/4
8	815689	Carriage
9	STD551062	*Washer, .630 x 1-1/8 x 3/32
10	815817	Nut, Sq. Lock
11	STD541462	*Nut, Lock 5/8-11
12	62636	Nut, Sq. 1/4-20
13	815693	Bracket, Rip Lock
14	STD541425	*Nut, Lock 1/4-20
15	62520	Spacer
16	273229	Screw, Hex Hd. Type "T" 1/4-20 x 1/2
17	816497	Spring, Rip Lock
18	815671	Cam, Rip Lock
19	818155	Lever, Rip Lock
20	STD532510	*Bolt, Carriage 1/4-20 x 1

Key No.	Part No.	Description
21	STD541231	*Nut, Hex Jam 5/16-18
22	STD551131	*Lockwasher, External 5/16
23	815691	Ring, Yoke Index
24	STD551012	*Washer, 17/64 x 7/16 x 1/32
25	817398-1	Screw, Cap Locking 1/4-20 x 5/8
26	818207	Yoke
27	109529	Nut, Square 5/8-11
28	815680	Spring, Swivel
29	STD541025	*Nut, Hex 1/4-20
30	816988	Knob, Swivel
31	508155	Wrench, Adjustment
32	815679-1	Pin, Index
33	806828	Screw, Pan Hd. Type "T" 1/4-20 x 1/2
34	STD512515	*Screw, Pan Hd. 1/4-20 x 1-1/2
36	815694	Stud, Yoke Clamp
37	STD551031	*Washer, 21/64 x 3/4 x 1/16
38	63777	Bearing, Carriage
39	60438	Washer, No. 2 Carriage Bearing
40	815807	Screw, Eccentric

*Standard Hardware Item may be Purchased Locally.

PARTS LIST FOR CRAFTSMAN 10" RADIAL SAW
MODEL NO. 113278641C

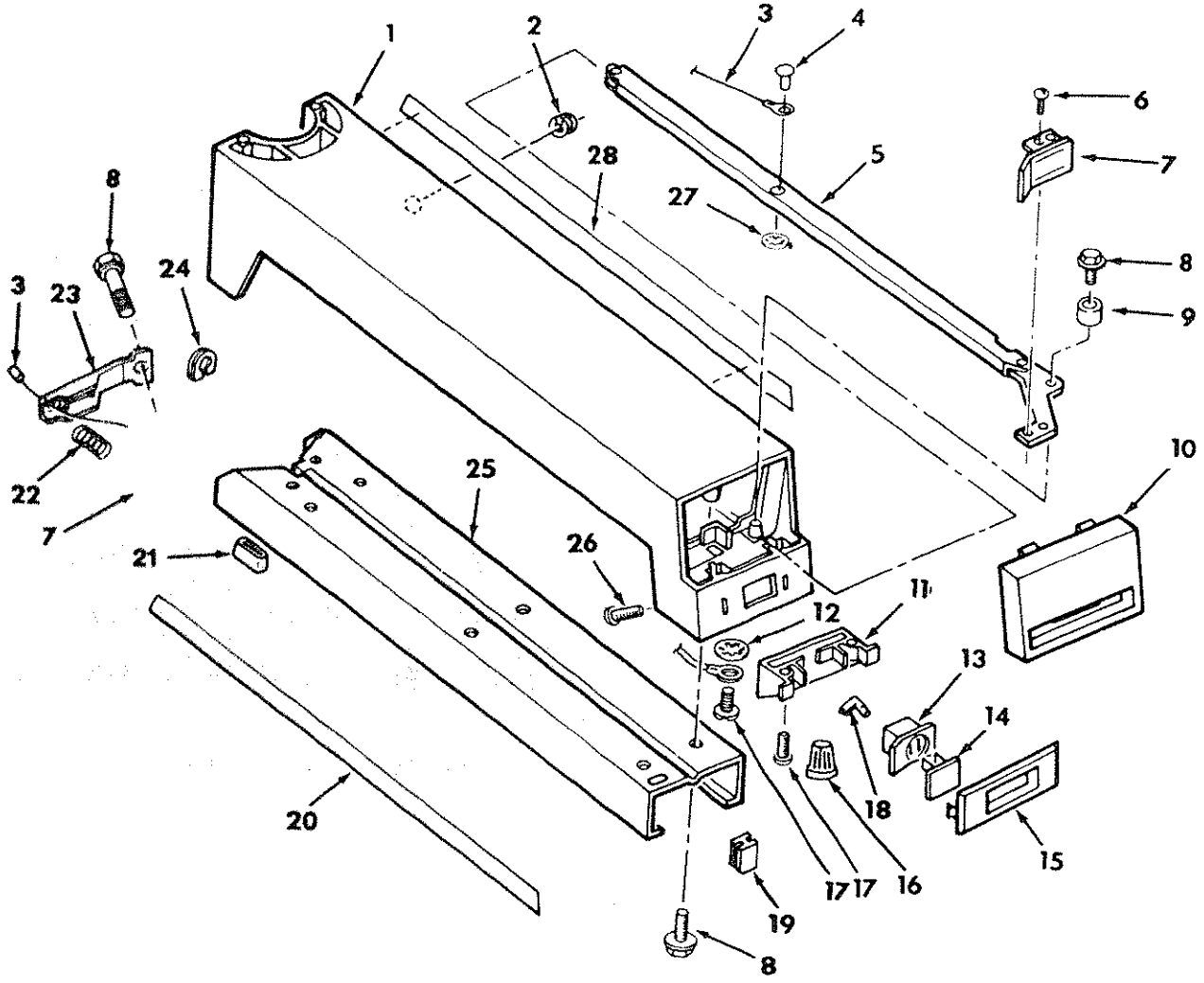

FIGURE 6

PARTS LIST FOR CRAFTSMAN 10" RADIAL SAW
MODEL NO. 113278641C

Always order by Part Number—Not by Key Number

FIGURE 6 — ARM ASSEMBLY

Key No.	Part No.	Description
1	818239	Arm, Radial
2	169123-2	Relief, Strain
3	815809	Cable
4	815774	Rivet, 1/4 x 1/2
5	818182	Actuator Assembly
6	STD601103	*Screw, Pan Rec. Type "T" 10-32 x 3/8
7	815703	Knob, Miter Lock
8	815856	Screw, Hex Washer Hd. 5/16-18 x 3/4
9	815779	Bushing
10	815716	Trim, Arm
11	815704	Housing, Switch
12	STD551208	*Lockwasher, Internal #8
13	816113	Switch, Locking

Key No.	Part No.	Description
14	9-22256	†Key, Switch
15	815976	Bezel, Switch
16	803709-1	Connector, Wire
17	STD600803	*Screw, Pan Rec. Hd. Type "T" 8-32 x 3/8
18	63467	Cap, Flag Terminal
19	818521	Bumper, Rubber
20	815786	Label, Trim L.H.
21	816178	Sleeve, Rubber
22	815867	Spring, Compression
23	815708	Spring, Miter Lock
24	815868	Relief, Strain
25	818088-1	Track, Arm
26	346030	Screw, Pan Rec. Hd. 8-10 x 1/2
27	60208	Push Nut, 1/4
28	815785	Label, Trim R.H.

*Standard Hardware Item may be Purchased Locally.
†Stock Item may be secured through the Hardware Department of Most Sears Retail or Catalog Order Houses.

PARTS LIST FOR CRAFTSMAN 10" RADIAL SAW
MODEL NO. 113278641C

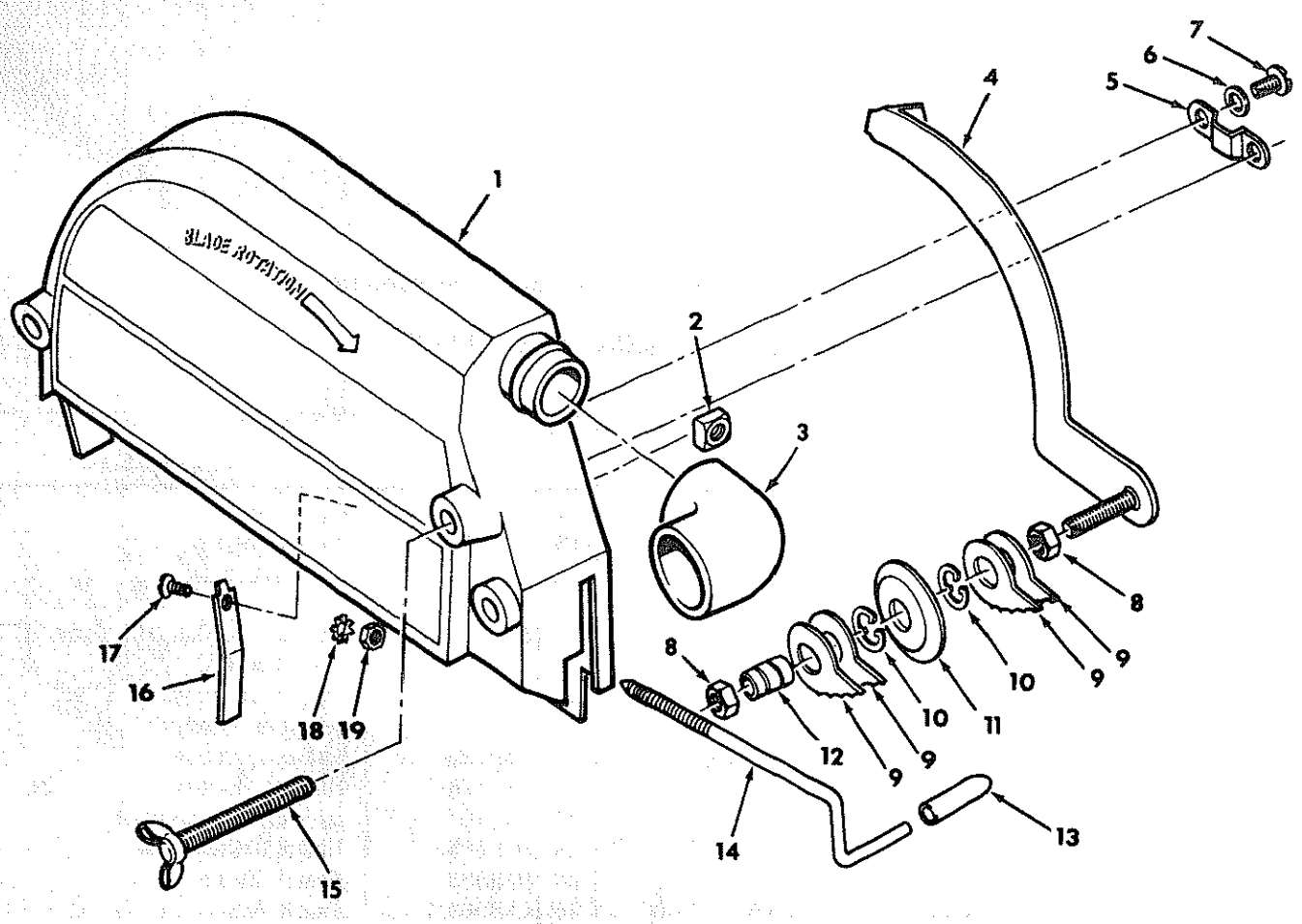

Always order by Part Number - Not by Key Number

FIGURE 7 — GUARD ASSEMBLY

Key No.	Part No.	Description
1	816264-1	Guard
2	120399	*Nut, Square 5/16-18
3	63258	Elbow, Dust
4	63541	Bar, Anti-Kickback
5	815816	Guide, Anti-Kickback
6	STD551010	*Washer, 13/64 x 5/8 x 1/32
7	STD601103	*Screw, Pan Hd. Type "T" 10-32 x 3/8
8	STD541231	*Nut, Hex Jam 5/6-18
9	815815	Pawl

Key No.	Part No.	Description
10	STD581050	*Ring, Retaining
11	63270	Spreader
12	816341	Bearing
13	60435	Grip
14	816070	Screw, Guard Clamp
15	166785-3	Screw, Wing 5/16-18 x 2-3/4
16	63538	Clamp, Guard
17	STD510805	*Screw, Pan Hd. 8-32 x 1/2
18	STD551208	*Lockwasher, External No. 8
19	STD541008	*Nut, Hex 8-32

*Standard Hardware Item may be Purchased Locally.

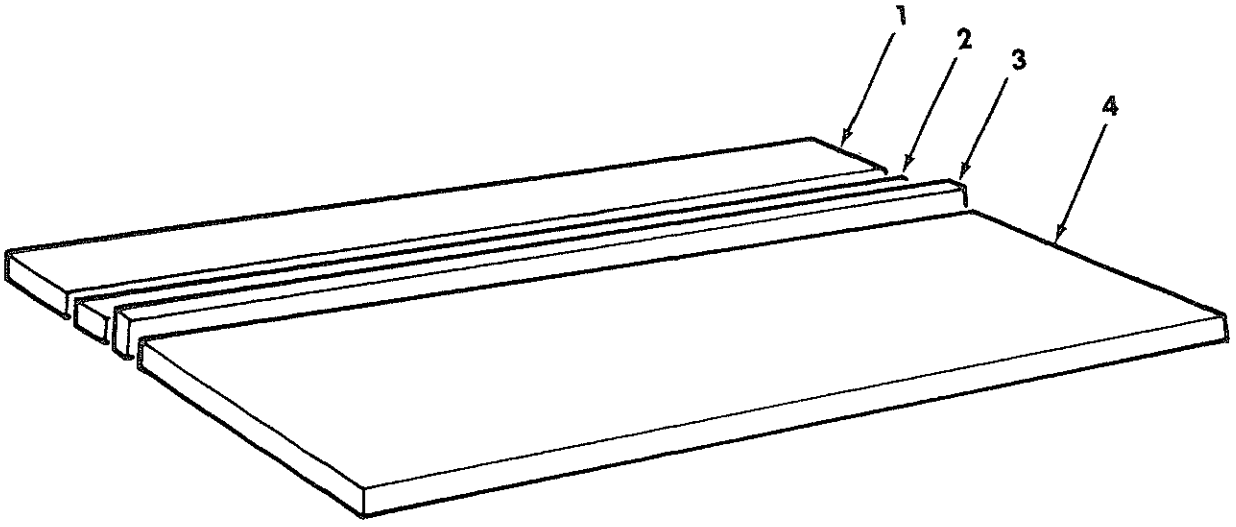

Always order by Part Number - Not by Key Number

FIGURE 8 — TABLE ASSEMBLY

Key No.	Part No.	Description
1	818169	Table, Rear
2	818168	Table Spacer
3	63432	Fence, Rip
4	818191	Table, Front

*Standard Hardware Item may be Purchased Locally.

INSTRUCTIONS FOR INSTALLING CASTERS

For Craftsman Leg Set

You will find two fixed casters in Loose Parts Bag

FIXED CASTER INSTALLATION

(LEG SET WITH SEPARATE BASE PLATE)

1. Adjust rear levelers to maximum down position.
2. Install 2 each washers, 17/64 x 9/16 x 3/64, on one hex hd bolt, 1/4-20 x 1/2 and insert into bottom hole on back lower corner of tool and start lockwasher and nut on screw but **do not tighten.**
3. Hook key hole of fixed caster body over bolt, trapping 2 each washers between fixed caster body and leg. Align slotted hole.
4. Insert bolt through slotted hole on caster body. Then through 2 each washers and leg. Install lockwasher and nut. **Do not tighten.**
5. Align caster so that it is vertical. Wrench tighten both bolts.
6. Repeat installation procedure for other fixed casters.

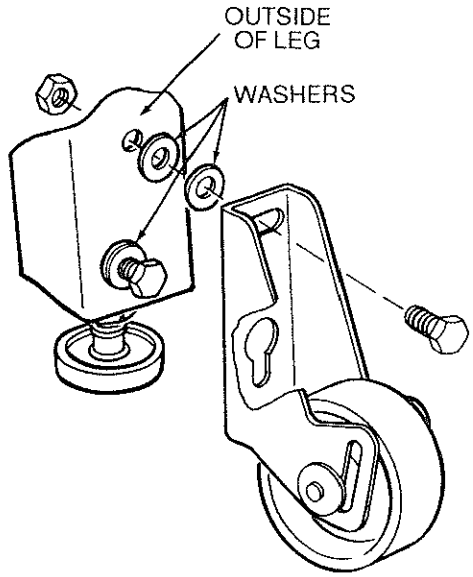

FIXED CASTER OPERATION

NOTE: The fixed caster may be positioned for stationary or for mobile use. Adjust levelers so unit rests on levelers in the stationary position (Illustration A) and on wheels in the mobile position (Illustration B).

1. Level the tool by adjusting the front levelers.

CAUTION:

A. Levelers must be positioned after installation of the casters so that when casters are elevated:

1. the entire weight of the tool is supported by the leveling feet, and

2. the arm of a radial saw slopes slightly downward to the rear so the carriage will not roll forward due to gravity.

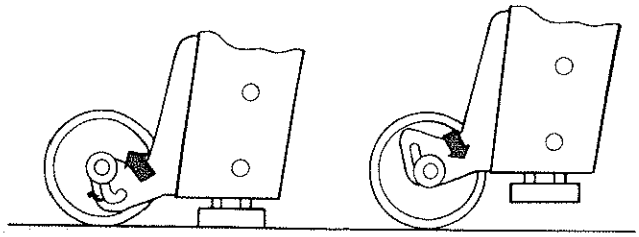

ILLUSTRATION A ILLUSTRATION B

B. Never operate the tool with the casters in the down position – the entire weight of the tool must be supported by the levelers when operating the saw, jointer or other tool.

NOTE: The term "tool" as used in these instructions refers to the assembly of the power tool (saw, jointer, etc.) on its leg set, cabinet, or stand.

*PLEASE NOTE: When ordering replacement caster, order Sears service part number #808532.

Dear Customer

In manufacturing this product, many steps have been taken to provide you with the highest quality. Unfortunately, errors or omissions occasionally occur. In the event that you find a missing or defective part, please contact your nearest Sears store.

If you have any suggestions that would help us to improve our assembly/operation instructions, or this product, please write them down and mail it to:

Sears Canada Inc.
222 Jarvis Street
Toronto, Ontario
M5B 2B8

Attention: Buyer Dept. 609

NAME _____

ADDRESS _____

POSTAL CODE _____ PHONE # _____

COMMENTS:

NOTES

NOTES

NOTES

NOTES

SEARS

Owner's Manual

STOCK NO. 09 27884
MODEL NO. 113.278641C

Sears service is available at or through your Sears Retail Store or Catalogue Sales Office.

How to order repair parts

Always mention the Model Number when requesting service or repair parts for your 10-Inch Radial Saw.

Order all parts listed in your Owner's Manual at any Sears Canada Inc. Retail Store or Catalogue Sales Office. If the parts you need are not stocked locally, your order will be sent to a Sears Repair Parts Distribution Centre for prompt handling.

When ordering repair parts always give:
1. The Part Number
2. The Part Description
3. The Model Number 113.278641C
4. The name of the item: 10-Inch Radial Saw

WE SERVICE WHAT WE SELL.
WE MAKE THIS PLEDGE BECAUSE OUR CONCERN FOR OUR CUSTOMERS DOES NOT END WITH THE SALE. TO HONOR OUR PLEDGE WE HAVE DEVELOPED A TOP-NOTCH SERVICE PROGRAM STAFFED BY HIGHLY TRAINED SPECIALISTS. THEIR KNOWLEDGE OF OUR NEW PRODUCTS IS CONSTANTLY UPGRADED. THEY USE ONLY PARTS SPECIFICALLY DESIGNED FOR YOUR FINE SEARS PRODUCTS.

Sold by: SEARS CANADA INC., TORONTO, ONTARIO, CANADA M5B 2B8